mecc alte

Totally Focused. Totally Independent.

Technical Guide

RPa 9B ; N

DDS
Dynamic Data Support

The world's largest independent producer of alternators 1 – 5,000kVA

c w 58

Standards

Alternators are designed and produced within an ISO 9001 environment. The entire series is manufactured according to, and complies with, the most common specifications such as CEI 2-3, IEC 34-1, EN 60034-1, VDE 0530, BS 4999-5000, NF 51.111, CAN/CSA-C22.2 No14-95-No100-95, NEMA MG 1-2011, ISO 8528-3. Other standards such as UL1446, UL 1004/4 and /B are available on request.

Windings and Performances

All windings are 2/3rds pitch to eliminate triplen harmonics within the voltage waveform and to avoid excessive neutral currents in certain parallel operating conditions. A fully interconnected aluminium or copper damper cage is supplied on the rotor of all models (excluding the ECP3 series).

- 12 wire reconnectable:
  50Hz – 380V to 440V and 220/110V to 240/120V (de-rates may apply at certain voltages)
  60Hz – 380V to 480V and 220/110V to 240/120V (de-rates may apply at certain voltages)

- 6 wire reconnectable:
  50Hz – 380V to 440V and 220V to 240V (de-rates may apply at certain voltages)
  60Hz – 380V to 480V and 220V to 240V (de-rates may apply at certain voltages)

Winding Configurations	Standard		Special (dedicated)			
	12 wire Reconnectable	6 wire Reconnectable	380V and 600V 60Hz	690V 50/60Hz	220-240V 1ph 50Hz	220-240V 1ph 60Hz
ECP3 to ECO38	Std	Option	Option	Option	Option	Option
ECO40 to ECO46	Std	Option	Option	Option	Option (to ECO40)	Option (to ECO40)
Insulation materials	Class H	Class H	Class H	Class H	Class H	Class H
High efficiency	Std	Std	Std	Std	Std	Std
High motor starting	>300%	>300%	>300%	>300%	>300%	>300%
THD (Total Harmonic Distortion)	Typically <3.5% full load L-L	Typically <3.0% full load L-L	Typically <3.5% full load L-L	Typically <3.5% full load L-L	Typically <4.5% full load L-N	Typically <4.5% full load L-N
Interference suppression	VDE 0875 G/N/K, EN61000-6-3, EN61000-6-2, others available on request					

Winding Protection

There are various degrees of protection for the windings following the standard impregnation process, as can be seen here. The TOTAL+ butadienic black flexible coating is recommended for arduous applications.

Winding Protection:	STANDARD	STANDARD+	GREY	GREY+	TOTAL+ (3% de-rate may apply on certain models)
ECP3	Std	Option	Option	Option	Option
ECP28,NPE32 and ECP32	-	Std	Option	Option	Option
ECP34 to ECO46	-	-	Std	Option	Option

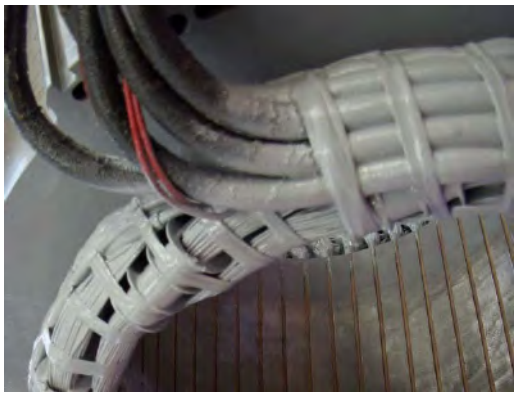

Grey treatment (marinization) on the left, TOTAL+ treatment shown on the right. The EG43 grey varnish, is an high temperature insulating enamel that forms a tough and flexible film, with excellent moisture and chemical protection. It is water and oil proof, and also protects windings from abrasion. It is applied spraying an over coating layer over the impregnated winding, or dipping the stator in a varnish barrel for superior treatments

The TOTAL+ is a protection system that makes Mecc Alte special. It is the ultimate winding treatment that offers truly superior performances when the environment is really harsh, or the application very demanding. It is a rubbery protection treatment, used to replace epoxies and silicones winding encapsulation. The TOTAL+ flexible black compound cures to a tough, resilient, glossy black thick coating that seals the copper against moisture and chemical attacks. Due to its encapsulation capability and flexibility, is also extremely resistant to the particle abrasion as it adsorbs the impacts. Moreover, the high flexibility leads to a long-trouble less life protection, as the compound follows elastically the thermal expansion cycles of the windings from the cold to the hot condition and vice versa without forming any cracks.

Protection for Environment

In addition to protection on the windings themselves, the alternators can have increased ingress protection. Standard levels are IP23 with further upgrades available to include inlet filters, IP43 and IP45: 7% de-rates apply on inlet filters and IP43 protection. 20-30% de-rates apply for IP45 depending on alternator model.

Additional air exit louvres (called IP23+) are optionably retrofittable in the overall ECP32 to ECO 46 range, in order to comply to the most strict marine regulations.

Construction

The robust mechanical structure withstands up to 5G in any direction and 9G vertically and its design permits easy access to the connections and components during routine maintenance check-ups. The mechanical design has used the most advanced FEM techniques. The materials used are: FEP12 steel for the frame, C45 steel for the shaft and cast iron or aluminum pressure die cast for the end-brackets: fans are aluminum die casted either nylon fiber glass loaded, UL compliant materials. Rotors are dynamically balanced according grade 2.5 of ISO 1940-1.

Terminals and Terminal Box

Easy access to regulators is assured through a pull out drawer or a drop down panel to allow safer adjustment. Large terminal boxes allow easy access of power cables, in the ECO43 and ECO46 higher power ranges the terminal allow the convenient choice of power cable or busbar connection with versatility of entry and connection. Current transformers are available as an option on series ECO 40, 43 and 46 with single or dual output.

Excitation and Regulation Systems

All ECP/ECO series have MAUX auxiliary winding to power the digital regulator. Both DSR and the DER1 are available to connect to PC through the DxR2 USB interface and DxR TERMINAL software to interrogate/download alarms & settings for analysis or for cloning other regulators. DER2 has got an integrated USB connection and can be connected to the PC without any optional connection boards. More settings such as LAMS, digital RAM based synchronous external control and soft start are obtainable through the DxR connection. Simple analogue potentiometers are available for the more usual adjustments.

Excitation Systems	DSR	DER1	DER2
ECP3 to ECO38	Std	Option	Option
ECO40 to ECO46	-	Std	Option
Parallel Operation	√	√	√
Mains Parallel	√	√	√
3 Phase Sensing (rms)	-	√	√
Accuracy	+/-1%	+/-0.5%	+/-0.5%
Remote Voltage Control	√	√	√
Alarm Log	√	√	√
Analogue and Digital Configurable	√	√	√
LAMS (Load Acceptance V/f)	√	√	√
APO (Active Protection Output)	√	√	√
Soft Start	√	√	√
High dynamic response	-	-	√
USB connection without external boards	-	-	√

For a given motor start duty a smaller machine may be selected – also enhanced by low sub-transient reactance values for non-linear loads. The whole range from 6.5 to 3400kVA is capable of >300% sustained short circuit current for up to 20 seconds.

Optional PMG3

PMG3 can be retro fit or factory fit on ECO 40, 43 and 46 series. This smart MeccAlte design allows an easy fix kit, through a tapered cone coupling and a simple replacement of the rear air louvre. PMG3 is also available on ECO 38, when ordered from the factory.

The complete AVR range is fully compatible with both MAUX and PMG3 systems, this minimises spare part management and flexibility of stock as one AVR suits all applications. The PMG3 is delivering the same amount of kVA available with the MAUX.

Accessories

Additional optionals can be fit on our alternator series, such as PTC thermistors or PT100 both on windings and bearings, space heaters, high and low profile of terminal boxes (on most series), air filter clogging sensors, rotating diode bridge failure sensor (RBD), power factor controller for parallel operation (PFR/2), parallel devices (standard from ECO 40), air filters, IP43 and IP45 protections, marine IP23 + protection for SOLAS requirements and many others.

Deration coefficients

	Ambient temperature (Celsius)					
Altitude (meters)	25	40	45	50	55	60
≤ 1000	1.07	1	0.96	0.93	0.91	0.89
> 1000 ≤ 1500	1.01	0.96	0.92	0.89	0.87	0.84
> 1500 ≤ 2000	0.96	0.91	0.87	0.84	0.83	0.79
> 2000 ≤ 3000	0.9	0.85	0.81	0.78	0.76	0.73

Notes on short circuit curves

The indicated coefficients have to be used to correct the three phase short circuit curves values as a function of the rated voltage.

50 Hz		*60 Hz*	
Voltage	*Factor*	*Voltage*	*Factor*
380	0.93X	415	0.85X
400	1X	440	0.90X
415	1.04X	460	0.95X
440	1.10X	480	1X

The indicated coefficient have to be used to correct the three phase short circuit curves values as a function of the type of short circuit voltage.

	3 phase	*2 phase L-L*	*1 phase L-N*
Istantaneous	1X	0.87X	1.30X
Minimum	1X	1.80X	3.20X
Sustained	1X	1.50X	2.50X
Max Duration	20 sec.	10 sec.	4 sec.

All the curves are shown for series or parallel star connection at 400V 50 Hz or 480V 60 Hz. If the unit is reconnected from series to parallel star, the additional coefficient is 2X. From series star to series delta, it is 1.72X. From series star to parallel delta, it is 3.44X.

p

a w tw	;	V s ° us	U
azs w tw	:	a wu ° us	\a9:
] tw x °w	89	] QR Ovs ° y w	@97 A49c d
R wu °	O z w	QR Ovs ° y w	@ 7 C49c d
c wy s w	Qdc	[s ° ^ w www	99=7
h ° v° y °uz	96:	N ° vw	748777
P vw syw wxvw uw	e7; 7=d:	Os s u° y	\d^ 8C; 748

PGr

gN6 h Mew 5c ° w6N t°w P479BaS																				
	deN] QOk48@ 69A				deN] QOk48=76; 7				U489=6; 7				S487 =6; 7				O4B76; 7			
dw°w d s k	: B7g	; 77g	; 8=g	; ; 7g	: B7g	; 77g	; 8=g	; ; 7g	: B7g	; 77g	; 8=g	; ; 7g	: B7g	; 77g	; 8=g	; ; 7g	: B7g	; 77g	; 8=g	; ; 7g
as s w d s kk	8C7g	977g	97Bg	997g	8C7g	977g	97Bg	997g	8C7g	977g	97Bg	997g	8C7g	977g	97Bg	997g	8C7g	977g	97Bg	997g
dw°w Qw s Δ	997g	9: 7g	9; 7g	9=; g	997g	9: 7g	9; 7g	9=; g	997g	9: 7g	9; 7g	9=; g	997g	9: 7g	9; 7g	9=; g	997g	9: 7g	9; 7g	9=; g
as s w Qw s ΔΔ	887g	88=g	897g	89Ag	887g	88=g	897g	89Ag	887g	88=g	897g	89Ag	887g	88=g	897g	89Ag	887g	88=g	897g	89Ag
W V z	8,4	**8,4**	8,4	-	8	**8**	8	-	7,8	**7,8**	7,8	-	7	**7**	7	-	6,2	**6,2**	6,2	-
	6,7	**6,7**	6,7	-	6,4	**6,4**	6,4	-	6,2	**6,2**	6,2	-	5,6	**5,6**	5,6	-	5	**5**	5	-
W W z	11,7	**11,7**	11,7	-	11,3	**11,3**	11,3	-	11	**11**	11	-	10	**10**	10	-	8,8	**8,8**	8,8	-
	9,4	**9,4**	9,4	-	9	**9**	9	-	8,8	**8,8**	8,8	-	8	**8**	8	-	7	**7**	7	-
W S z	14,6	**14,6**	14,6	-	14	**14**	14	-	13,5	**13,5**	13,5	-	12,5	**12,5**	12,5	-	10,8	**10,8**	10,8	-
	11,7	**11,7**	11,7	-	11,2	**11,2**	11,2	-	10,8	**10,8**	10,8	-	10	**10**	10	-	8,6	**8,6**	8,6	-
W z	18	**18**	18	16,4	17,5	**17,5**	17,5	16	17	**17**	17	15,5	16	**16**	16	14,5	13,6	**13,6**	13,6	12,4
	14,4	**14,4**	14,4	13,1	14	**14**	14	12,8	13,6	**13,6**	13,6	12,4	12,8	**12,8**	12,8	11,6	10,9	**10,9**	10,9	9,9
W z	21,5	**21,5**	21,5	19,4	20,5	**20,5**	20,5	18,5	20	**20**	20	18	18,5	**18,5**	18,5	17	16	**16**	16	14,4
	17,2	**17,2**	17,2	15,5	16,4	**16,4**	16,4	14,8	16	**16**	16	14,4	14,8	**14,8**	14,8	13,6	12,8	**12,8**	12,8	11,5
W Wz	26,5	**26,5**	26,5	-	25,5	**25,5**	25,5	-	25	**25**	25	-	23	**23**	23	-	20	**20**	20	-
	21,2	**21,2**	21,2	-	20,4	**20,4**	20,4	-	20	**20**	20	-	18,4	**18,4**	18,4	-	16	**16**	16	-
W z	32,5	**32,5**	32,5	-	30,5	**30,5**	30,5	-	30	**30**	30	-	26	**26**	26	-	24	**24**	24	-
	26	**26**	26	-	24,4	**24,4**	24,4	-	24	**24**	24	-	20,8	**20,8**	20,8	-	19,2	**19,2**	19,2	-

QGr

gN6 h Mew 5c ° w6N t°w P479BaS																				
	deN] QOk48@ 69A				deN] QOk48=76; 7				U489=6; 7				S487 =6; 7				O4B76; 7			
dw°w d s k	; 8=g	; ; 7g	; @7g	; B7g	; 8=g	; ; 7g	; @7g	; B7g	; 8=g	; ; 7g	; @7g	; B7g	; 8=g	; ; 7g	; @7g	; B7g	; 8=g	; ; 7g	; @7g	; B7g
as s w d s kk	97Bg	997g	9: 7g	9; 7g	97Bg	997g	9: 7g	9; 7g	97Bg	997g	9: 7g	9; 7g	97Bg	997g	9: 7g	9; 7g	97Bg	997g	9: 7g	9; 7g
dw°w Qw s Δ	9; 7g	9=; g	9@=g	9AAg	9; 7g	9=; g	9@=g	9AAg	9; 7g	9=; g	9@=g	9AAg	9; 7g	9=; g	9@=g	9AAg	9; 7g	9=; g	9@=g	9AAg
as s w Qw s ΔΔ	897g	89Ag	8 : g	8 Bg	897g	89Ag	8 : g	8 Bg	897g	89Ag	8 : g	8 Bg	897g	89Ag	8 : g	8 Bg	897g	89Ag	8 : g	8 Bg
W V z	8,8	9,4	10	**10**	8,6	9	9,7	**9,7**	8,3	8,8	9,4	**9,4**	7,5	7,8	8,5	**8,5**	6,6	7	7,5	**7,5**
	7	7,5	8	**8**	6,9	7,2	7,8	**7,8**	6,6	7,0	7,5	**7,5**	6	6,2	6,8	**6,8**	5,3	5,6	6	**6**
W W z	12,2	13,1	14	**14**	11,8	12,8	13,6	**13,6**	11,5	12,4	13,2	**13,2**	10,5	11	12	**12**	9,2	9,9	10,6	**10,6**
	9,8	10,5	11,2	**11,2**	9,4	10,2	10,9	**10,9**	9,2	9,9	10,6	**10,6**	8,4	8,8	9,6	**9,6**	7,4	7,9	8,5	**8,5**
W S z	15,1	16,2	17,5	**17,5**	14,4	15,5	16,7	**16,7**	14	15	16,2	**16,2**	13	13,5	15	**15**	11,2	12	13	**13**
	12,1	13	14	**14**	11,5	12,4	13,4	**13,4**	11,2	12	13	**13**	10,4	10,8	12	**12**	9	9,6	10,4	**10,4**
W z	18,5	19,7	21,6	**21,6**	18	19,1	21	**21**	17,5	18,6	20,4	**20,4**	16,5	17,5	19	**19**	14	15	16,3	**16,3**
	14,8	15,8	17,3	**17,3**	14,4	15,3	16,8	**16,8**	14	14,9	16,3	**16,3**	13,2	14	15,2	**15,2**	11,2	12	13	**13**
W z	22,5	25	25,8	**25,8**	21,5	23,6	24,6	**24,6**	21	23	24	**24**	19	20	22	**22**	16,8	18,4	19,2	**19,2**
	18	20	20,6	**20,6**	17,2	18,9	19,7	**19,7**	16,8	18,4	19,2	**19,2**	15,2	16	17,6	**17,6**	13,4	14,7	15,4	**15,4**
W Wz	27,5	29	31,8	**31,8**	26,5	28	30,6	**30,6**	26	27,5	30	**30**	24	25,5	27,5	**27,5**	20,8	22	24	**24**
	22	23,2	25,4	**25,4**	21,2	22,4	24,5	**24,5**	20,8	22	24	**24**	19,2	20,4	22	**22**	16,6	17,6	19,2	**19,2**
W z	35,2	38,4	38,4	**38,4**	33,5	36,6	36,6	**36,6**	33	36	36	**36**	29	32	32	**32**	26,4	28,8	29	**29**
	28,2	30,7	30,7	**30,7**	26,8	29,3	29,3	**29,3**	26,4	28,8	28,8	**28,8**	23,2	25,6	25,6	**25,6**	21,1	23	23,2	**23,2**

2 Cl r ENGG

f s s vw / vw5R] @7 : ; 4 0			RPa9B 8gd; N	RPa9B 9gd; N	RPa9B 7d; N	RPa9B d; N	RPa9B [; N	RPa9B 9Z; N	RPa9B gZ; N
Xd	Q° vu 4s ° uz vsu s uv	%	207	199,9	188,6	200,9	184,5	189,6	169,1
X'd	Q° vu 4s ° s °w vsu s uv	%	17,9	17,5	16,6	17,3	17,22	16,6	15,79
X''d	Q° vu 4s ° t s °w vsu s uv	%	12,8	12,5	10,7	11,8	9,84	9,43	9,02
Xq	b sv s w4s ° uz vsu s uv	%	75,8	72,8	64,6	73,8	80	77,9	72,8
X'q	b sv s w4s ° s °w vsu s uv	%	75,8	72,8	64,6	73,8	80	77,9	72,8
X''q	b sv s w4s ° t s °w vsu s uv	%	26,6	24,6	22,5	24,6	22,6	21,5	19,5
X_2	] wys ° w4 w w uv vsu s uv	%	16,9	15,9	14,4	17,4	14,8	14	13,5
X_0	l w w w uv vsu s uv	%	3,9	3,59	3,18	3,69	3,38	3,2	2,87
ds s vw									
Xd	Q° vu 4s ° uz vsu s uv	%	176	169,9	160,3	170,7	156,8	161,2	143,8
X'd	Q° vu 4s ° s °w vsu s uv	%	15,2	14,9	14,1	14,7	14,64	14,1	13,42
X''d	Q° vu 4s ° t s °w vsu s uv	%	10,9	10,6	9,06	10	8,36	8,01	7,67
Xq	b sv s w4s ° uz vsu s uv	%	64,5	61,8	54,9	62,7	68	66,2	61,9
X'q	b sv s w4s ° s °w vsu s uv	%	64,5	61,8	54,9	62,7	68	66,2	61,9
X''q	b sv s w4s ° t s °w vsu s uv	%	22,6	20,9	19,2	20,9	19,2	18,3	16,6
X_2	] wys ° w4 w w uv vsu s uv	%	14,4	13,5	12,3	14,8	12,5	11,9	11,5
X_0	l w w w uv vsu s uv	%	3,9	3,59	3,18	3,69	3,38	3,2	2,87
Kcc	dz u° u ° s °		0,68	0,62	0,6	0,67	0,64	0,58	0,62
T'd	e s °w ° wu s	sec	0,055	0,05	0,06	0,051	0,044	0,047	0,046
T''d	d t s °w ° wu s	sec	0,02	0,022	0,025	0,018	0,014	0,013	0,012
T'do	^ w u° u ° ° wu s	sec	0,95	0,91	0,98	0,9	0,85	0,93	0,93
Ta	N s w ° wu s	sec	0,015	0,018	0,019	0,016	0,012	0,011	0,011

h Cl r ENGG

Io	R u° s ° u w s sv	A	0,6	0,7	0,7	0,5	0,5	0,6	0,6
Ic	R u° s ° u w s x sv	A	2,5	2,4	2,7	1,7	1,5	1,6	2,0
^ w sv					8z ° s @z w° v 887, s vw sv				
^ w sv w 97 wu5		,				300			
Uvs v° ° s °		W	1033	1409	1671	1996	2307	2779	3242
ewv z wUs °u Ssu 4eUS		%	<2	<2	<2	<2	<2	<2	<2
h s vx Q° 5/eUQ0x sv ZZ6Z]		%	2 / 2	2 / 2	2 / 2	2 / 2	2 / 2	2 / 2	2,1 / 2
h s vx Q° 5/eUQ0 sv ZZ6Z]		%	3,7 / 3,7	3,7 / 3,7	3,7 / 3,7	3,7 / 3,7	3,6 / 3,5	3,4 / 3,2	3,3 / 3,1

2 Cl r ENSG

f s s vw / vw5R] @7 : ; 4 0			RPa9B 8gd; N	RPa9B 9gd; N	RPa9B 7d; N	RPa9B d; N	RPa9B [; N	RPa9B 9Z; N	RPa9B gZ; N
Xd	Q° vu 4s ° uz vsu s uv	%	207,9	199,9	188,6	200,9	184,5	190	169,1
X'd	Q° vu 4s ° s °w vsu s uv	%	18	17,5	16,6	17,3	17,22	16,6	15,79
X''d	Q° vu 4s ° t s °w vsu s uv	%	12,9	12,5	10,7	11,8	9,84	9,43	9,02
Xq	b sv s w4s ° uz vsu s uv	%	76,2	72,8	64,6	73,8	80	77,9	72,8
X'q	b sv s w4s ° s °w vsu s uv	%	76,2	72,8	64,6	73,8	80	77,9	72,8
X''q	b sv s w4s ° t s °w vsu s uv	%	26,8	24,6	22,5	24,6	22,6	21,5	19,5
X_2	] wys ° w4 w w uv vsu s uv	%	17	15,9	14,4	17,4	14,8	14	13,5
X_0	l w w w uv vsu s uv	%	3,91	3,59	3,18	3,69	3,38	3,2	2,87
ds s vw									
Xd	Q° vu 4s ° uz vsu s uv	%	176,7	169,9	160,3	170,8	156,8	161,5	143,8
X'd	Q° vu 4s ° s °w vsu s uv	%	15,3	14,9	14,1	14,7	14,64	14,1	13,42
X''d	Q° vu 4s ° t s °w vsu s uv	%	10,9	10,6	9,06	10	8,36	8,01	7,67
Xq	b sv s w4s ° uz vsu s uv	%	64,7	61,8	54,9	62,7	68	66,2	61,9
X'q	b sv s w4s ° s °w vsu s uv	%	64,7	61,8	54,9	62,7	68	66,2	61,9
X''q	b sv s w4s ° t s °w vsu s uv	%	22,7	20,9	19,2	20,9	19,2	18,3	16,6
X_2	] wys ° w4 w w uv vsu s uv	%	14,4	13,5	12,3	14,8	12,5	11,9	11,5
X_0	l w w w uv vsu s uv	%	3,91	3,59	3,18	3,69	3,38	3,2	2,87
Kcc	dz u° u ° s °		0,68	0,62	0,6	0,67	0,62	0,58	0,62
T'd	e s °w ° wu s	sec	0,055	0,05	0,06	0,051	0,044	0,047	0,046
T''d	d t s °w ° wu s	sec	0,02	0,022	0,025	0,018	0,014	0,013	0,012
T'do	^ w u° u ° ° wu s	sec	0,95	0,91	0,98	0,9	0,85	0,93	0,93
Ta	N s w ° wu s	sec	0,015	0,018	0,019	0,016	0,012	0,011	0,011

h Cl r ENSG

Io	R u° s ° u w s sv	A	0,6	0,6	0,6	0,4	0,5	0,55	0,55
Ic	R u° s ° u w s x sv	A	2,4	2,5	2,7	1,7	1,5	1,6	1,9
^ w sv					8z ° s @z w° v 887, s vw sv				
^ w sv w 97 wu5		,				300			
Uvs v° ° s °		W	1134	1536	1818	2079	2253	2756	3271
ewv z wV wxws uvSsu 4e\5			<45	<45	<45	<45	<45	<45	<45
h s vx Q° 5/eUQ0x sv ZZ6Z]		%	2 / 2	2 / 2	2 / 2	2 / 2	2 / 2	2 / 2	2,1 / 2
h s vx Q° 5/eUQ0 sv ZZ6Z]		%	3,7 / 3,7	3,7 / 3,7	3,7 / 3,7	3,7 / 3,7	3,6 / 3,5	3,4 / 3,2	3,3 / 3,1

n g PGr

[vw		: B7g =7U					; 77g =7U					; 8=g =7U					; ; 7g =7U				
		75D=	75=	75A=	8	88B	75D=	75=	75A=	8	88B	75D=	75=	75A=	8	88B	75D=	75=	75A=	8	88B
RPa9B 8g d; N	%	80,7	83,4	85,7	85,7	85,4	80,6	83,5	86,0	85,8	85,5	80,4	83,5	85,9	85,5	85,2	-	-	-	-	-
RPa9B 9gd; N	%	80,9	83,7	86,2	86,1	85,8	80,8	83,8	86,5	86,2	85,9	80,6	83,8	86,4	85,9	85,6	-	-	-	-	-
RPa9B 7d; N	%	81,6	84,3	86,6	86,5	86,2	81,5	84,4	86,9	86,6	86,3	81,3	84,4	86,8	86,3	86,0	-	-	-	-	-
RPa9B d; N	%	83,2	85,3	87,1	87,1	86,8	83,1	85,4	87,4	87,2	86,9	82,9	85,4	87,3	86,9	86,6	82,4	85,1	87,0	86,7	86,3
RPa9B [; N	%	83,1	85,5	87,5	87,3	87,0	83,0	85,6	87,8	87,4	87,1	82,8	85,6	87,5	87,1	86,8	82,3	85,5	87,4	86,9	86,5
RPa9B 9Z; N	%	83,8	86,0	87,8	87,4	87,1	83,6	86,1	88,1	87,8	87,5	83,6	86,1	88,2	88,1	87,7	-	-	-	-	-
RPa9B gZ; N	%	84,2	86,4	88,2	87,7	87,4	84,0	86,5	88,5	88,1	87,8	84,0	86,5	88,6	88,4	88,2	-	-	-	-	-

W V z
400/230 50Hz

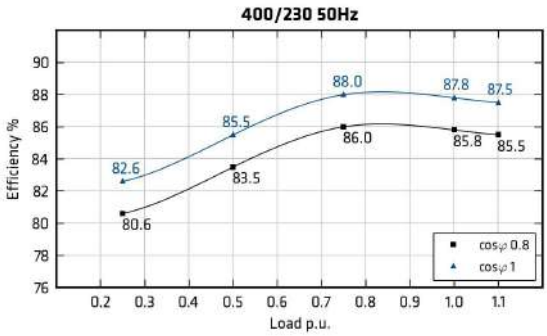

W W z
400/230 50Hz

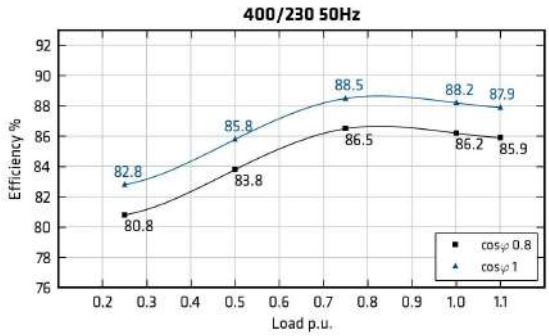

W S z
400/230 50Hz

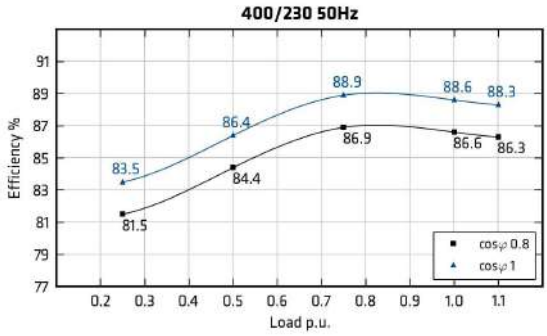

W z
400/230 50Hz

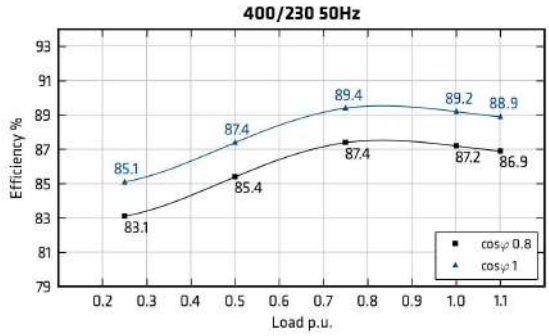

W z
400/230 50Hz

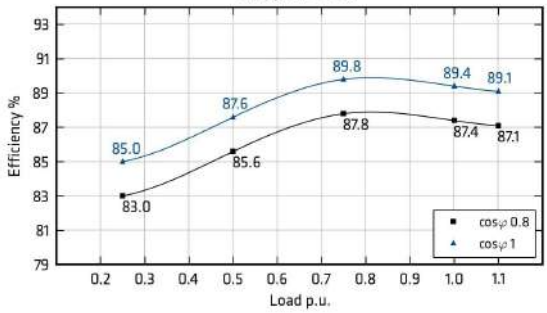

W Wz
400/230 50Hz

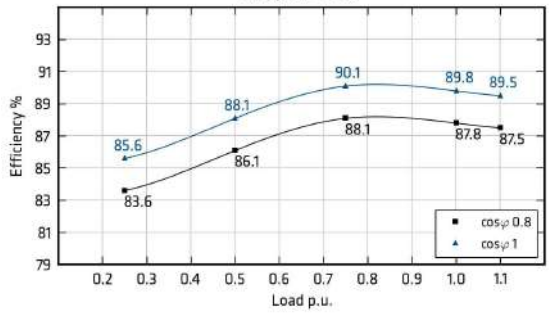

W z
400/230 50Hz

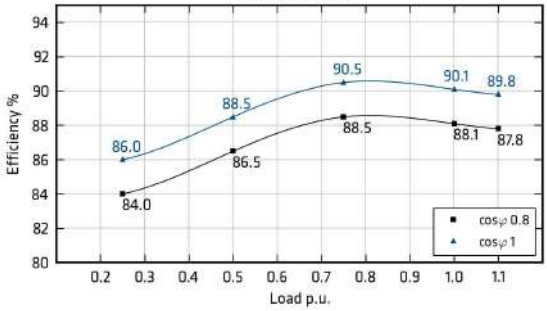

n g QGr

[vw		; 8=g @7U					; ; 7g @7U					; @7g @7U					; B7g @7U				
		75B=	75=	75A=	8	88B	75B=	75=	75A=	8	88B	75B=	75=	75A=	8	88B	75B=	75=	75A=	8	88B
RPa9B 8gd; N	%	81,4	84,2	86,4	86,2	85,9	81,2	84,3	86,6	86,7	86,5	81,3	84,4	86,8	86,8	86,6	81,6	84,5	87,0	86,9	86,7
RPa9B 9gd; N	%	81,6	84,5	87,0	86,6	86,3	81,4	84,6	87,2	87,1	86,9	81,5	84,7	87,4	87,2	87,0	81,8	84,8	87,6	87,3	87,1
RPa9B 7d; N	%	82,3	85,2	87,4	87,0	86,7	82,1	85,3	87,6	87,5	87,3	82,2	85,4	87,8	87,6	87,4	82,5	85,5	88,0	87,7	87,5
RPa9B d; N	%	83,3	85,9	88,0	88,0	87,7	83,1	86,0	88,2	88,5	88,3	83,2	86,1	88,4	88,6	88,4	83,5	86,2	88,6	88,7	88,5
RPa9B [; N	%	85,1	87,2	88,9	88,8	88,5	85,1	87,3	89,1	89,3	89,1	85,1	87,4	89,3	89,4	89,2	85,0	87,5	89,5	89,5	89,3
RPa9B 9Z; N	%	85,9	87,7	89,4	88,8	88,4	85,7	87,8	89,6	89,1	88,8	85,9	87,9	89,8	89,3	89,0	85,8	88,0	90,0	89,7	89,4
RPa9B gZ; N	%	86,1	88,1	89,7	88,9	88,5	86,1	88,2	89,9	89,2	88,8	86,0	88,3	90,1	89,4	89,1	85,9	88,4	90,3	89,8	89,5

W V z
480/277 60Hz

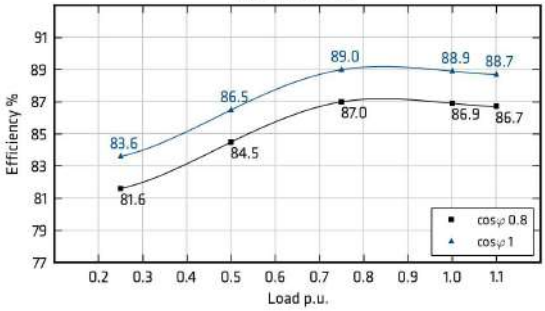

W W z
480/277 60Hz

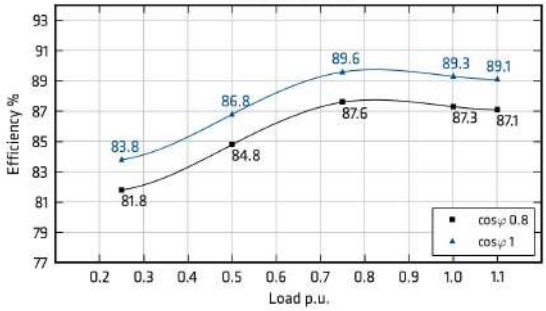

W S z
480/277 60Hz

W z
480/277 60Hz

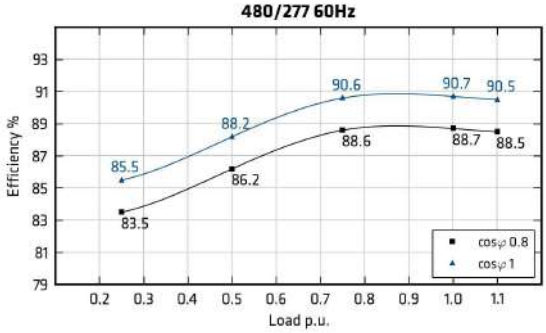

W z
480/277 60Hz

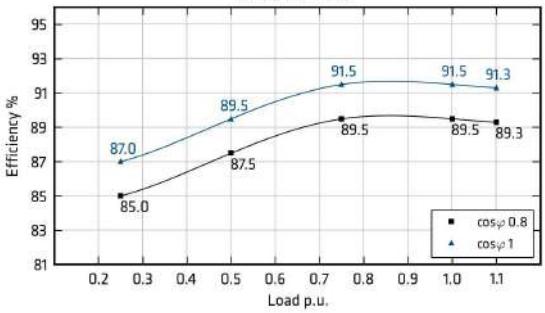

W Wz
480/277 60Hz

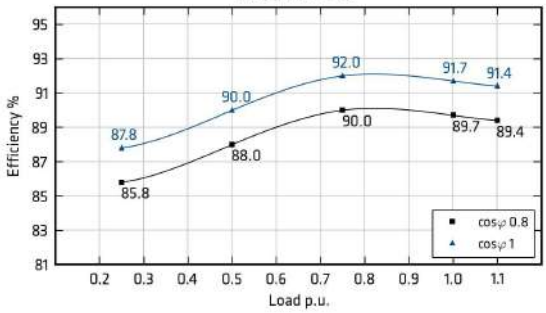

W z
480/277 60Hz

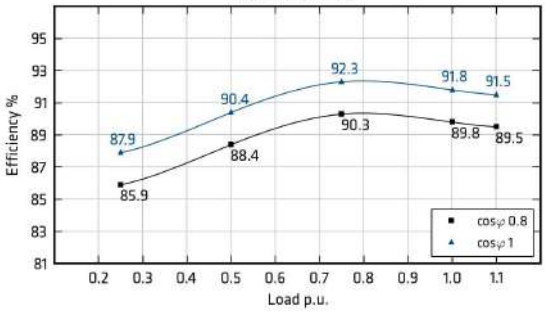

zSS L S

z S L S

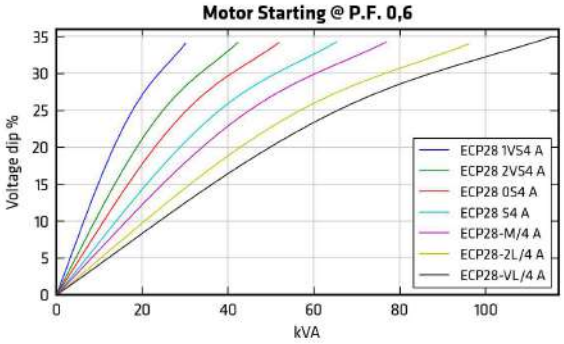

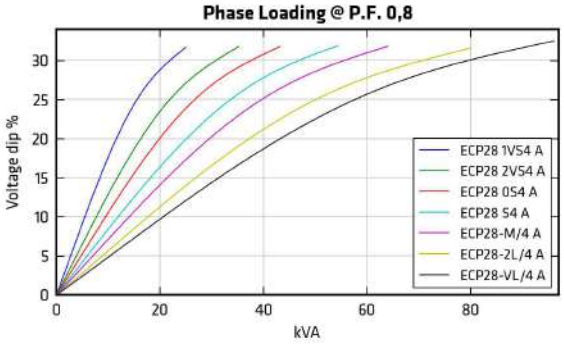

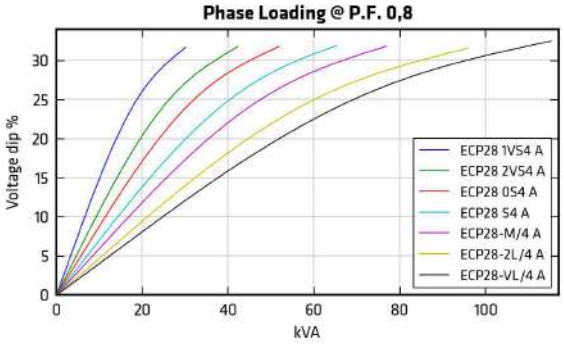

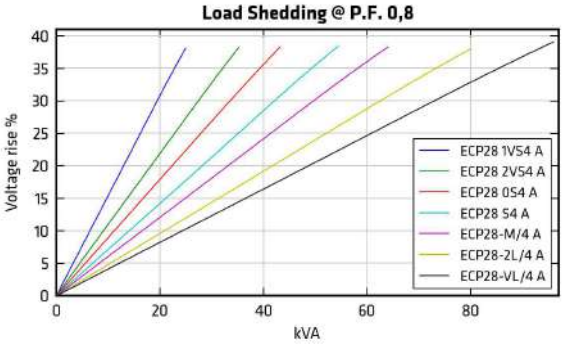

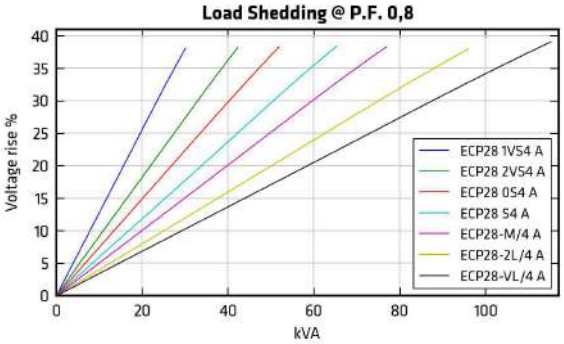

V vw us w s °w u w s s x u ° x s w xsu syw°x ° v°us vw3 vs w uvvv s x D

a w Ssu u vwx°u°w u vwu /aSPPCB t w vw w xsu 75 @u w D
aSPPH ° /Nc Pu /aS w 0067 5B
R s w5ezwaSPP s w xsu 75 ° 888C9 maSPPH ° /Nc Pu /75 0067 5B c5ez° vs zs zw sywxs s s y° w w s x75 ° w ° s w zw
w zs us t w vwsv zw x75@u w°x zw sv ° u °vvvw 888C9 ° w t °yyw /8C, z°yzw s w5C5
V z° w s w3s 877 gN sv ° w ° s x75 ° w ° s w ° sywxs s 88C gN sv ° w ° s x75@5

g sywu vwx°u°w u vwu /gPPCD
gPPH/; 776g w CB °x =7 U EgPPH/; B76g w CB °x @7 U
R s w5gPP s ; 8=g @7 U ° 85 : B mgPPH/; B76; 8=Cp9c5ez° vs zs zw sywxs s s y° w w s ; 8=g ° w ° s w zw w zs us t w vwsv
zw w xsu 75@u w°x zw sv ° u °vvvw 85 : B ° w t °yyw /: : , z°yzw s w5C5
V z° w s w3s 877 gN sv ° w ° s ; 8=g ° w ° s w ° sywxs s 8: gN sv ° w ° s ; B7g5

PGr

Cz

RPa9B 8gd; N

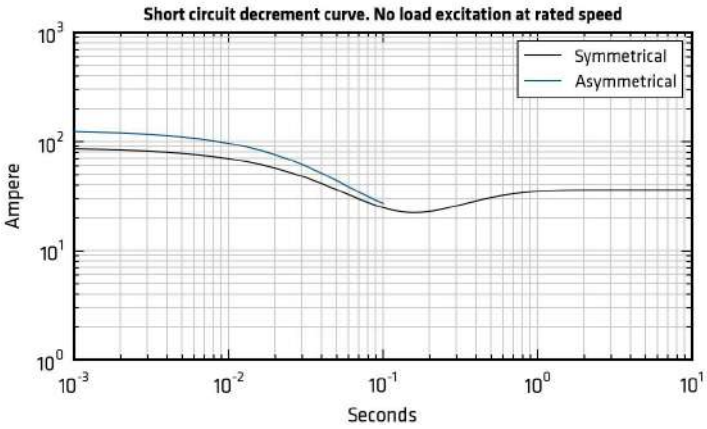

RPa9B 9gd; N

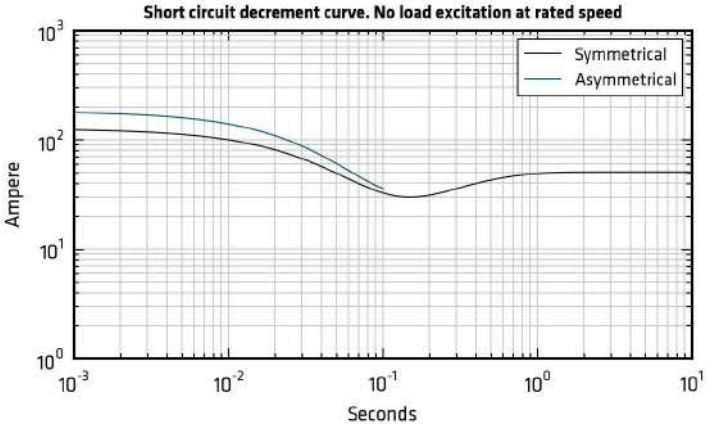

RPa9B 7d; N

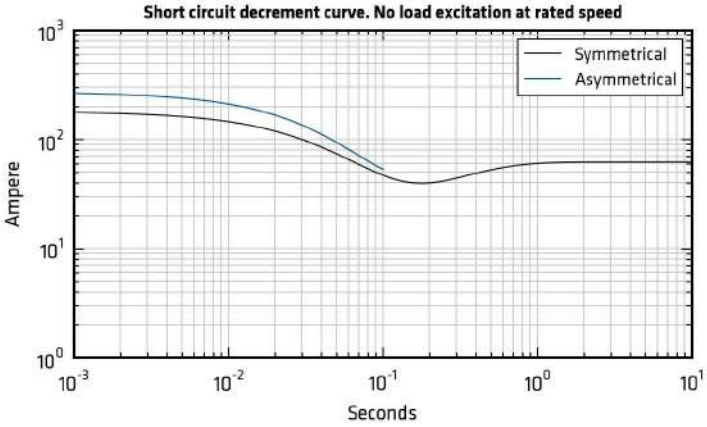

RPa9B d; N

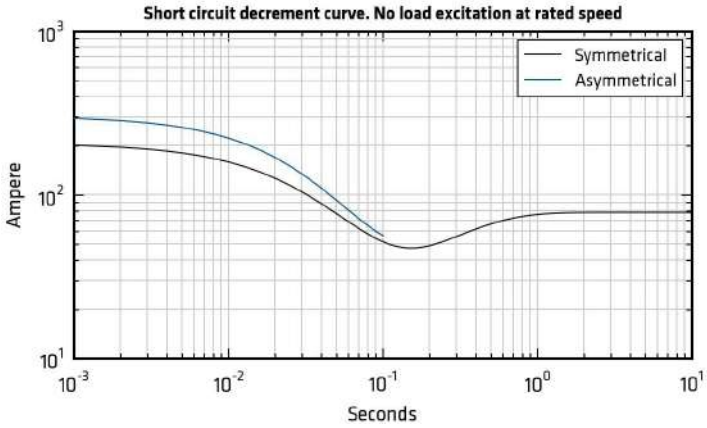

1a ws w wxw st w s syw@

PGr

Cz

RPa9B [; N

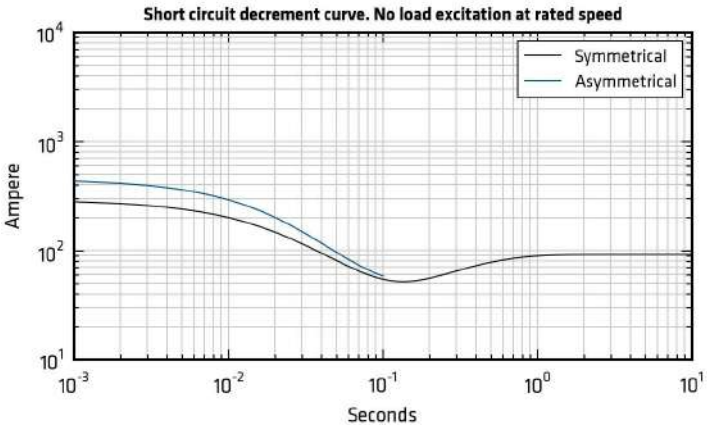

RPa9B 9Z; N

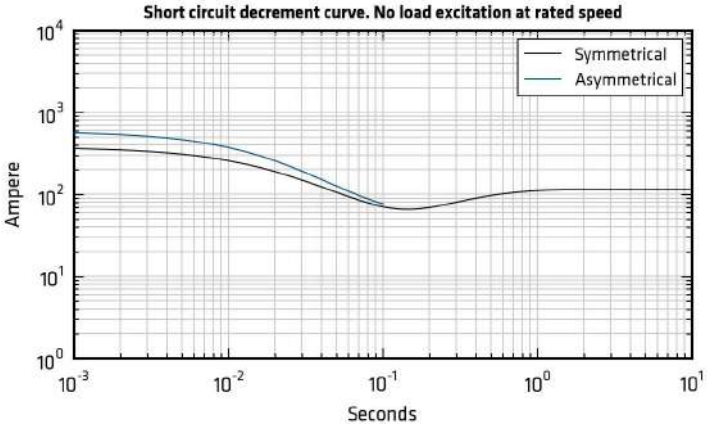

RPa9B gZ; N

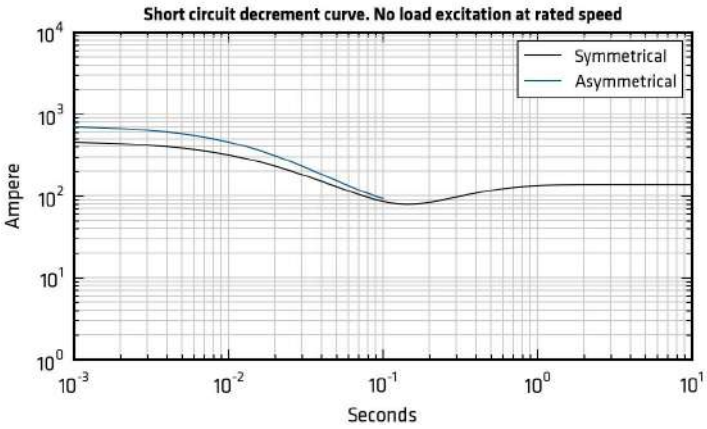

1a ws w wxw st w s syw@

QGr

Cz

RPa9B 8gd; N

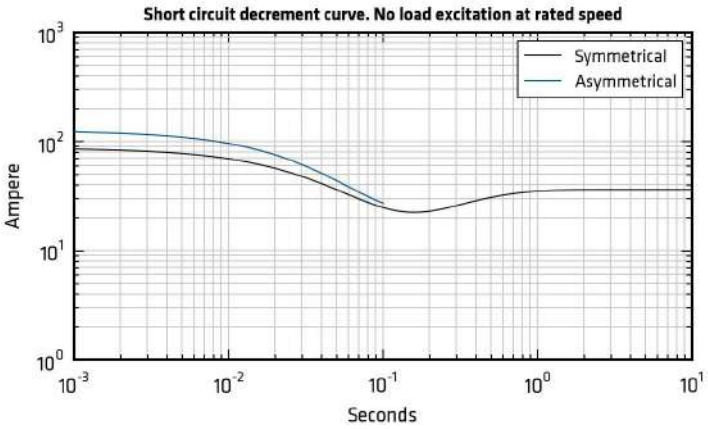

RPa9B 9gd; N

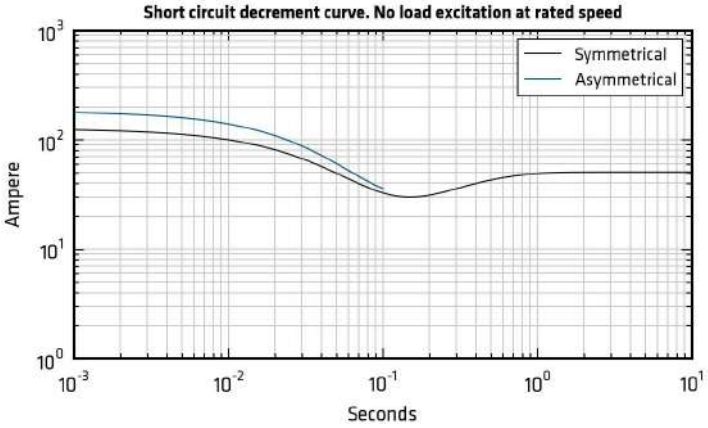

RPa9B 7d; N

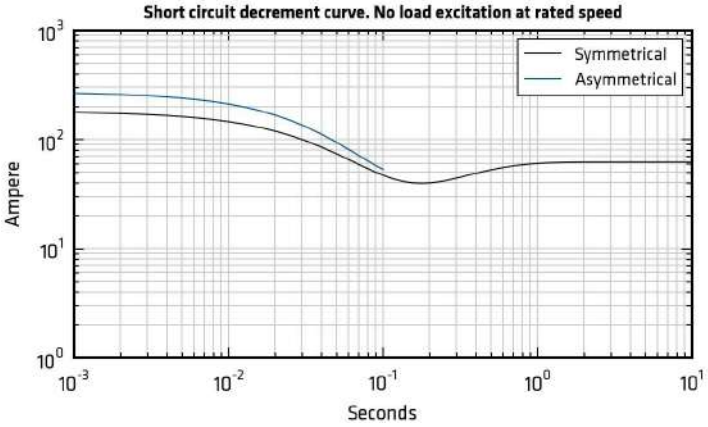

RPa9B d; N

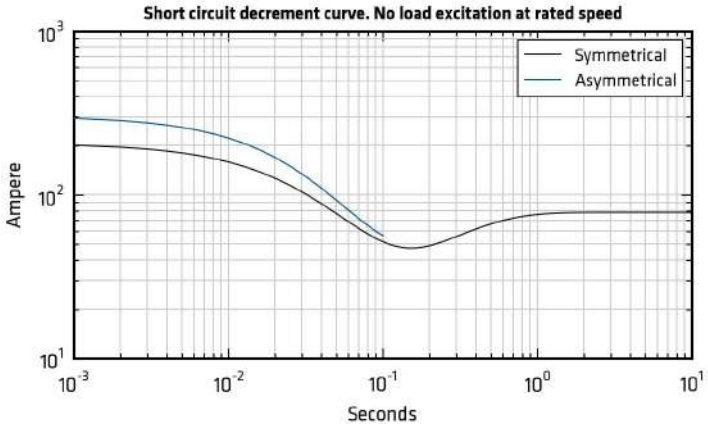

1a ws w wxw st w s syw@

QGr

Cz

RPa9B [; N

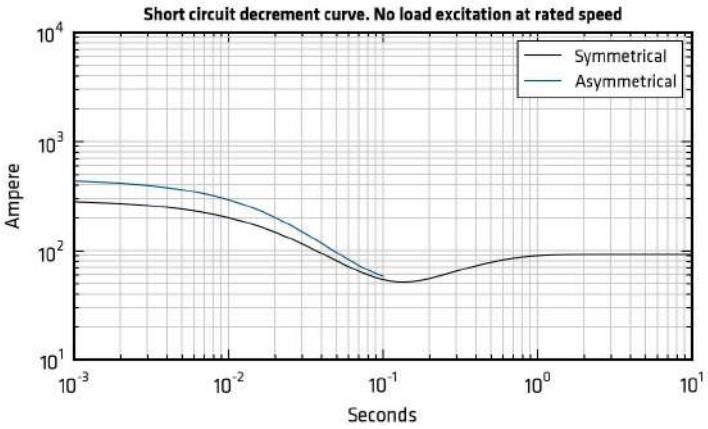

RPa9B 9Z; N

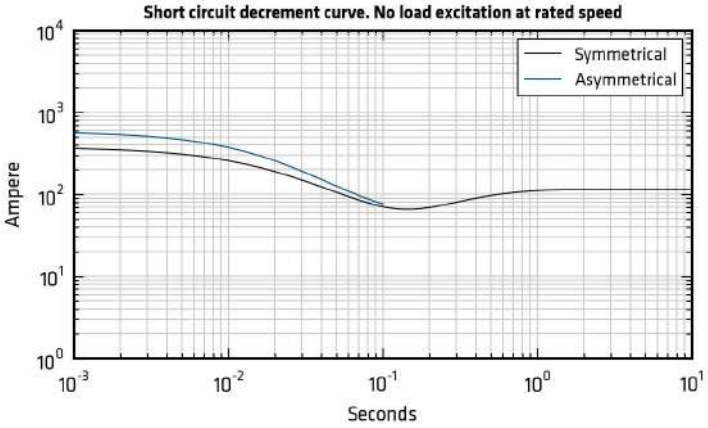

RPa9B gZ; N

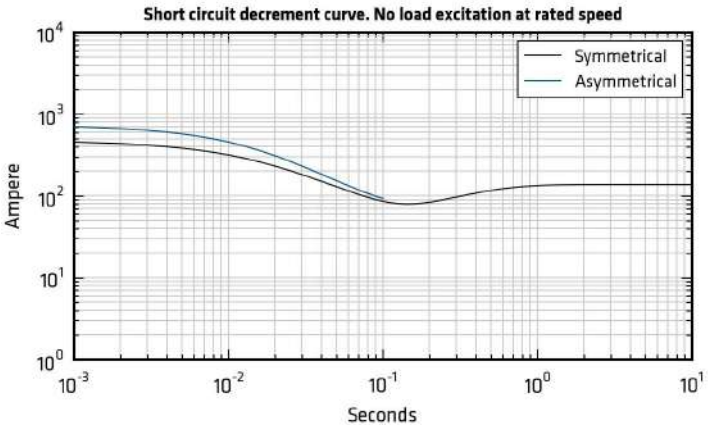

1a ws w wxw st w s syw@

h l

Qs s		RPa9B 8gd; N		RPa9B 9gd; N		RPa9B 7d; N		RPa9B d; N		RPa9B [; N		RPa9B 9Z; N		RPa9B gZ; N	
		=7U	@7U	=7U	@7U	=7U	@7U	=7U	@7U	=7U	@7U	=7U	@7U	=7U	@7U
Qs w usyw		N ° °													
d s h ° v° y c w ° s uw/97 P0	Ω	0,951		0,582		0,43		0,283		0,198		0,128		0,106	
c h ° v° y c w ° s uw/97 P0	Ω	0,911		1,032		1,13		1,26		1,396		1,67		1,86	
d s R u° w c w ° s uw/97 P0	Ω	10,6		10,6		10,6		10,6		10,6		10,6		10,6	
c R u° w c w ° s uw/97 P0	Ω	0,417		0,417		0,417		0,417		0,417		0,417		0,417	
h wŷyz xu wwyw ws	kg	79,0		86,0		96,0		104,0		115,0		136,0		162,0	
f t s s uw sy w°u	kN/mm	3,0		3,0		3,0		3,0		3,8		4,5		4,7	
N° x	m^3/min	5,3	5,8	5,3	5,8	5,3	5,8	5,3	5,8	5,3	5,8	5,3	5,8	5,3	5,8
] ° w w w s 8 6A	dB(A)	68/57	71/61	68/57	71/61	68/57	71/61	68/57	71/61	68/57	71/61	68/57	71/61	68/57	71/61

m

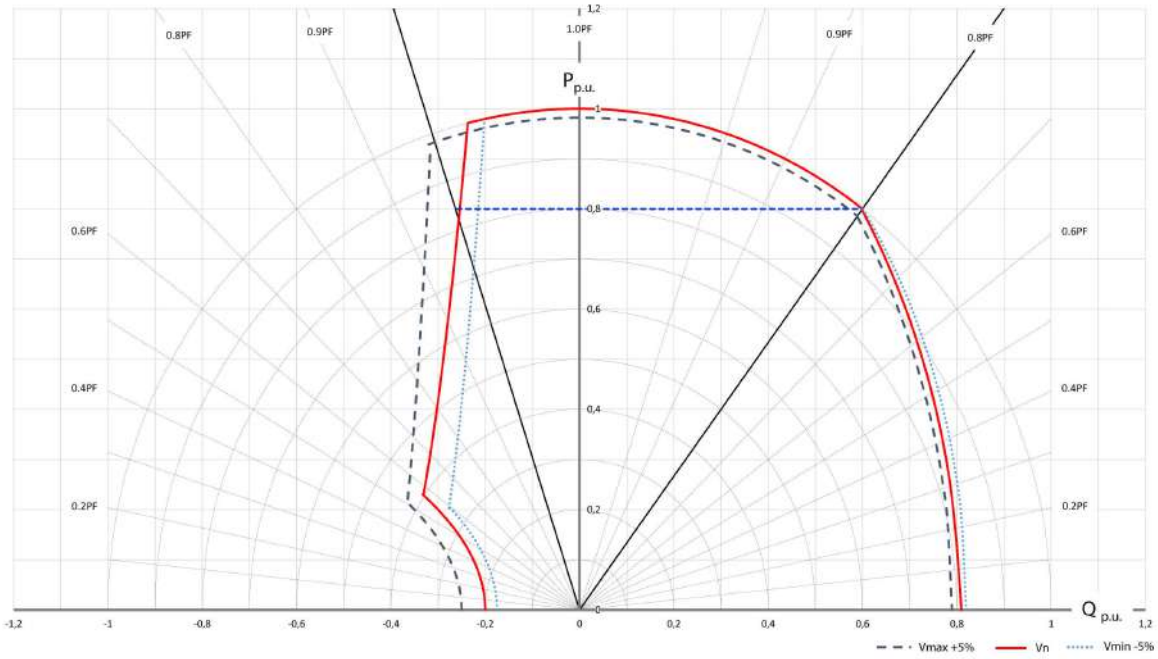

nl LS H Nh

TWO BEARING MOMENTS OF INERTIA

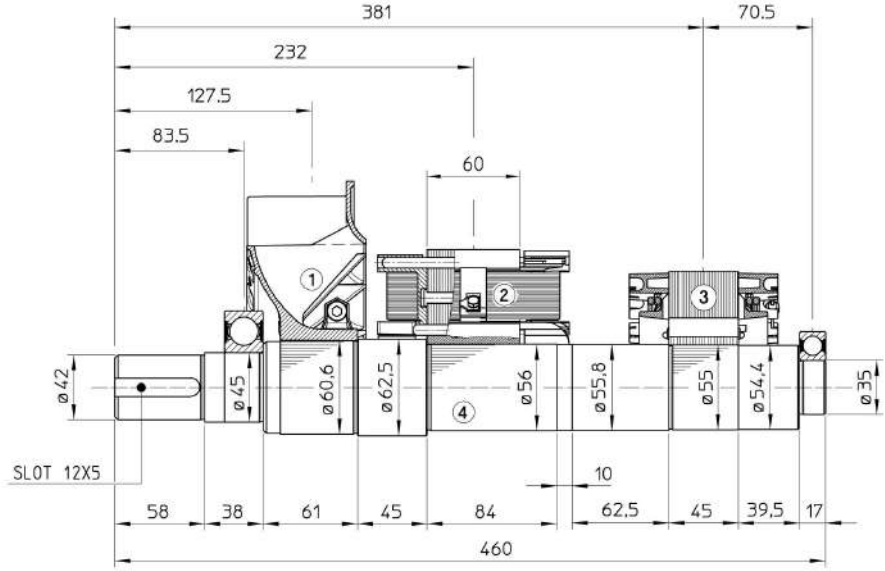

POS.	COMPONENT	WEIGHT (kg)	J (kgm^2)
1	FAN	0.6	0.0044
2	MAIN ROTOR	10.9	0.0437
3	EX. ROTOR	5.5	0.0172
4	SHAFT	8.1	0.0031
TOTAL		25.1	0.0684

TWO BEARING DIMENSIONS

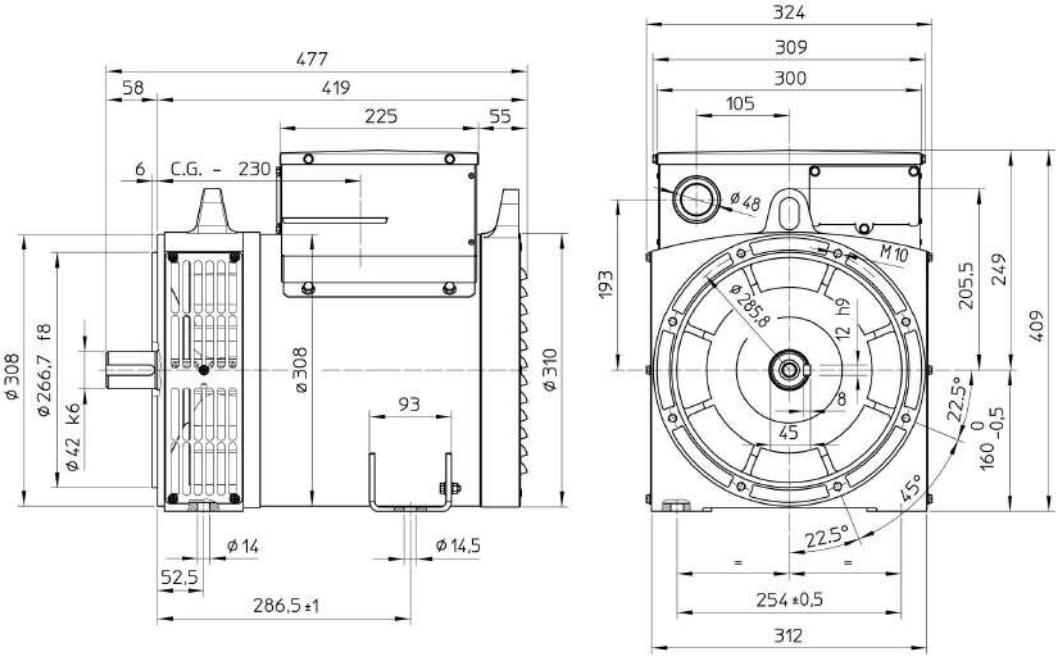

C.G.= GRAVITY CENTER

nl LS H Nh

SINGLE BEARING MOMENTS OF INERTIA

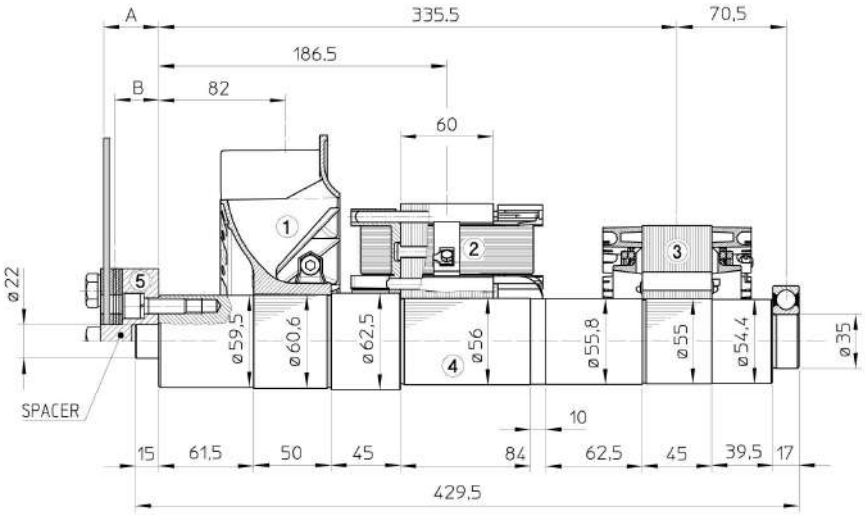

POS.	COMPONENT	WEIGHT (kg)	J (kgm^2)
1	FAN	0.6	0.0044
2	MAIN ROTOR	10.9	0.0437
3	EX. ROTOR	5.5	0.0172
4	SHAFT	8.1	0.0033
TOTAL		25.1	0.0686

SAE	5	SHAFTS COUPLING FLEX PLATE		
N°	A	B	WEIGHT kg	J kgm^2
6 1/2	4	2	1.08	0.0065
7 1/2	4	2	1.35	0.0101
8	35.6	28.3	2.84	0.0158
10	27.6	22.9	3.25	0.0303
11 1/2	14	11.2	3.6	0.0471

SINGLE BEARING DIMENSIONS

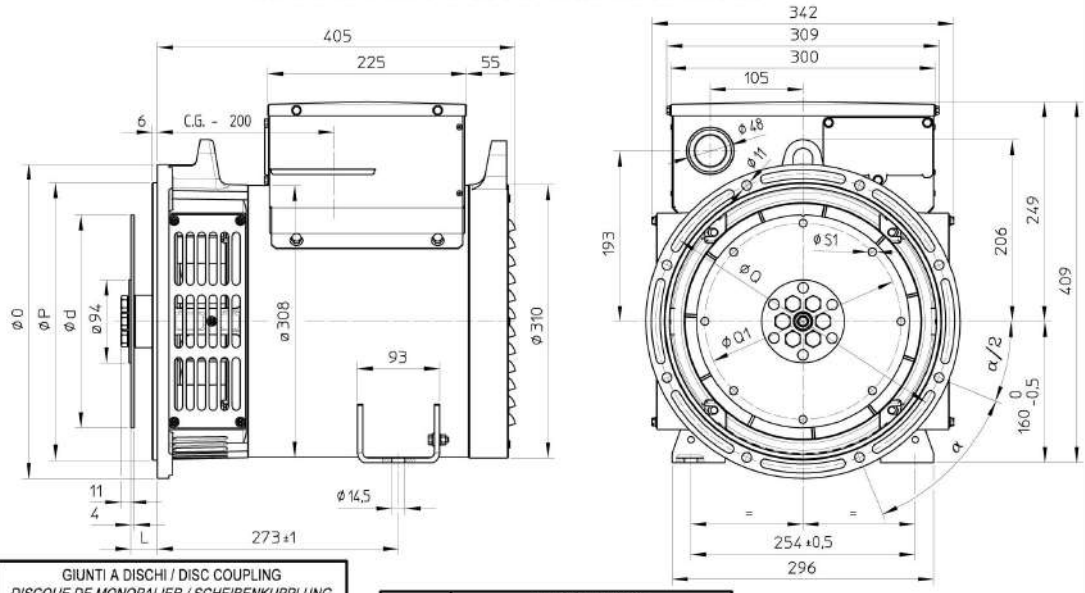

SAE N.	GIUNTI A DISCHI / DISC COUPLING *DISCQUE DE MONOPALIER / SCHEIBENKUPPLUNG*				
	d	*L*	*Q1*	*S1*	α_1
6 1/2	215.9	30.2	200	9	60°
7 1/2	241.3	30.2	222.25	9	45°
8	263.52	62	244.47	11	60°
10	314.32	53.8	295.27	11	45°
11 1/2	352.42	39.6	333.37	11	45°

SAE N.	FLANGIA / FLANGE *BRIDE / FLANSCH*			
	O	*P*	*Q*	α
5	356	314.3	333.4	45°
4	403	362	381	30°
3	451	409.6	428.6	30°
2	490	447.7	466.7	30°

C.G.= GRAVITY CENTER

nl LS L Nh

TWO BEARING MOMENTS OF INERTIA

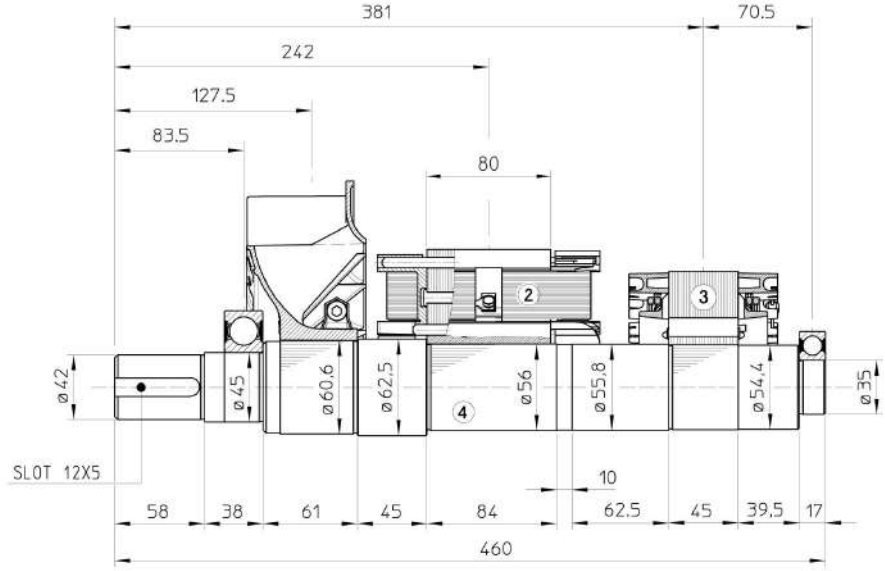

POS.	COMPONENT	WEIGHT (kg)	J (kgm^2)
1	FAN	0.6	0.0044
2	MAIN ROTOR	13.5	0.0542
3	EX. ROTOR	5.5	0.0172
4	SHAFT	8.1	0.0031
TOTAL		27.7	0.0789

TWO BEARING DIMENSIONS

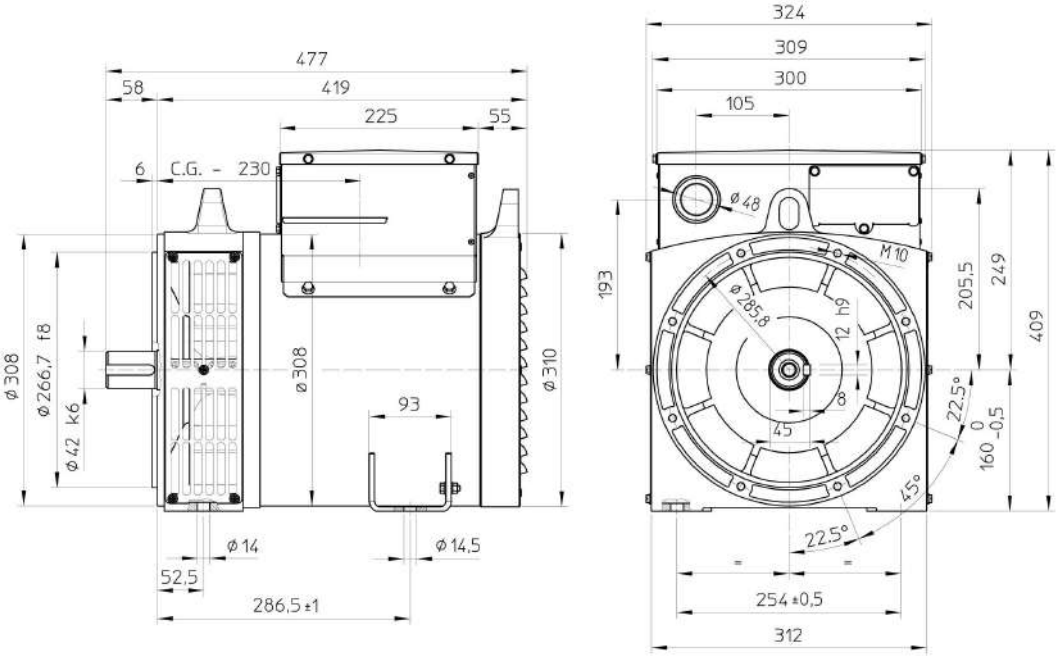

C.G.= GRAVITY CENTER

nl LS L Nh

SINGLE BEARING MOMENTS OF INERTIA

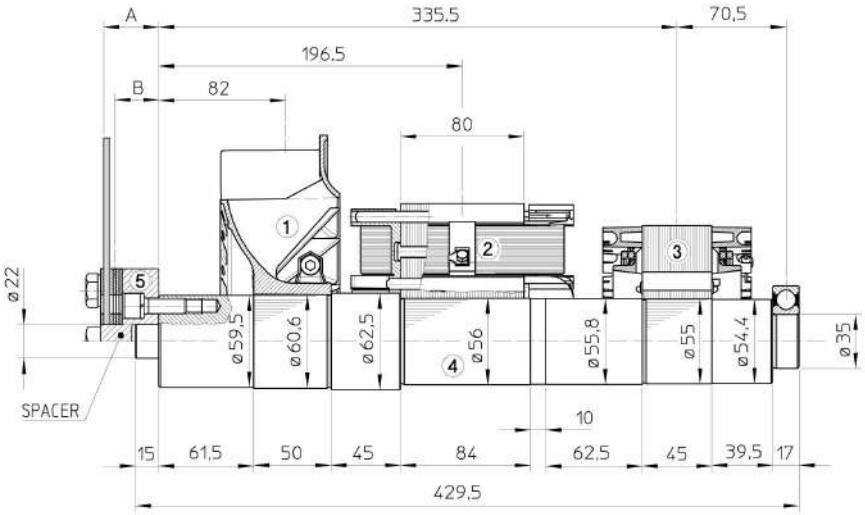

POS.	COMPONENT	WEIGHT (kg)	J (kgm^2)
1	FAN	0.6	0.0044
2	MAIN ROTOR	13.5	0.0542
3	EX. ROTOR	5.5	0.0172
4	SHAFT	8.1	0.0033
TOTAL		27.7	0.0791

SAE	5	SHAFTS COUPLING FLEX PLATE		
N°	A	B	WEIGHT kg	J kgm^2
6 1/2	4	2	1.08	0.0065
7 1/2	4	2	1.35	0.0101
8	35.6	28.3	2.84	0.0158
10	27.6	22.9	3.25	0.0303
11 1/2	14	11.2	3.6	0.0471

SINGLE BEARING DIMENSIONS

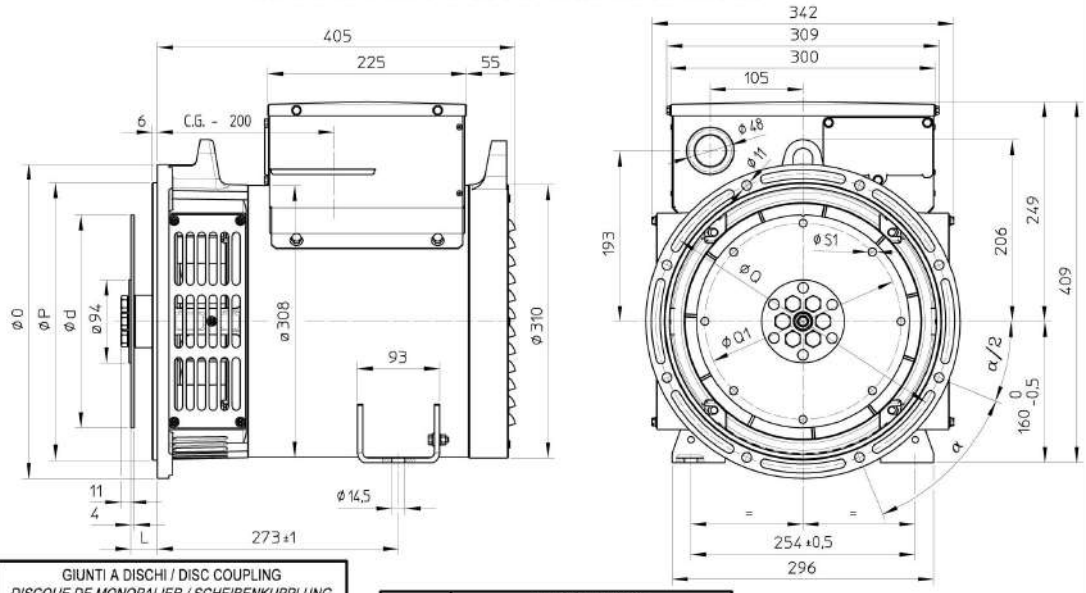

SAE N.	GIUNTI A DISCHI / DISC COUPLING *DISCQUE DE MONOPALIER / SCHEIBENKUPPLUNG*				
	d	*L*	*Q1*	*S1*	α_1
6 1/2	215.9	30.2	200	9	60°
7 1/2	241.3	30.2	222.25	9	45°
8	263.52	62	244.47	11	60°
10	314.32	53.8	295.27	11	45°
11 1/2	352.42	39.6	333.37	11	45°

SAE N.	FLANGIA / FLANGE *BRIDE / FLANSCH*			
	O	*P*	*Q*	α
5	356	314.3	333.4	45°
4	403	362	381	30°
3	451	409.6	428.6	30°
2	490	447.7	466.7	30°

C.G.= GRAVITY CENTER

nl LS G N h

TWO BEARING MOMENTS OF INERTIA

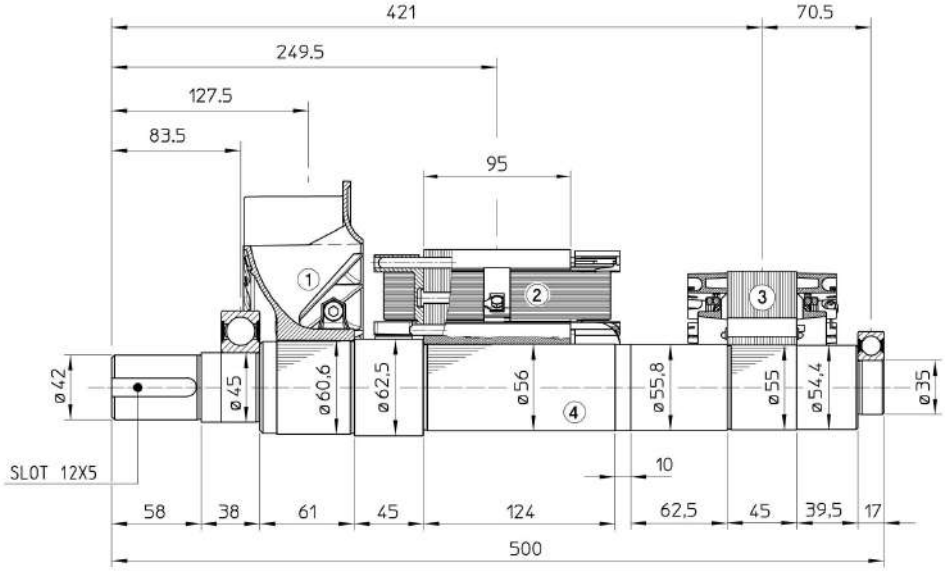

POS.	COMPONENT	WEIGHT (kg)	J (kgm^2)
1	FAN	0.6	0.0044
2	MAIN ROTOR	14.2	0.0564
3	EX. ROTOR	5.5	0.0172
4	SHAFT	8.8	0.0034
TOTAL		29.1	0.0814

TWO BEARING DIMENSIONS

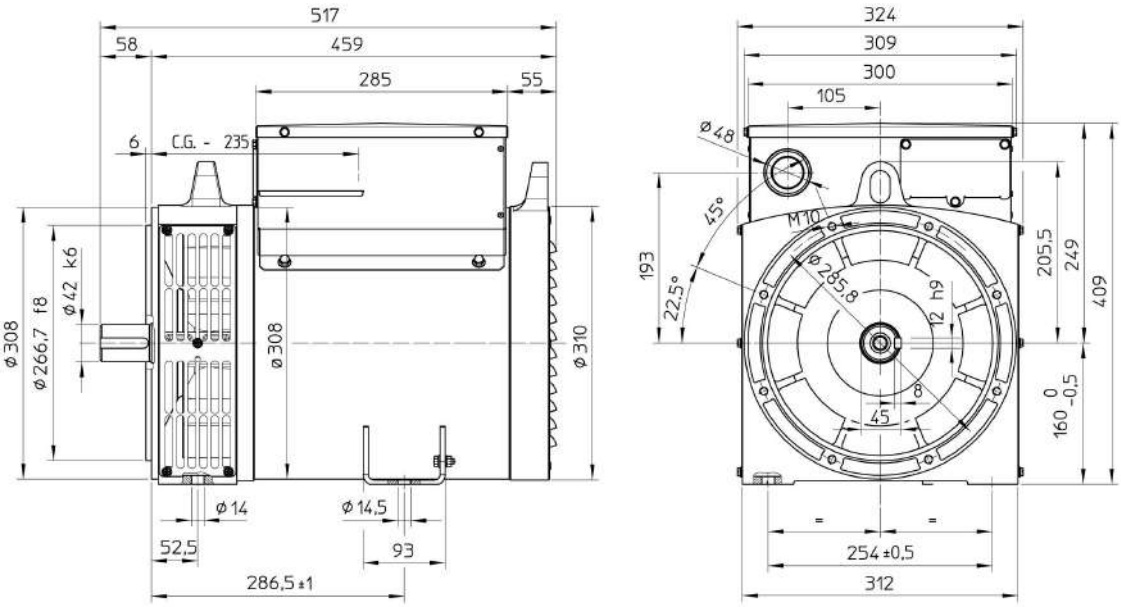

C.G.= GRAVITY CENTER

nl LS G N h

SINGLE BEARING MOMENTS OF INERTIA

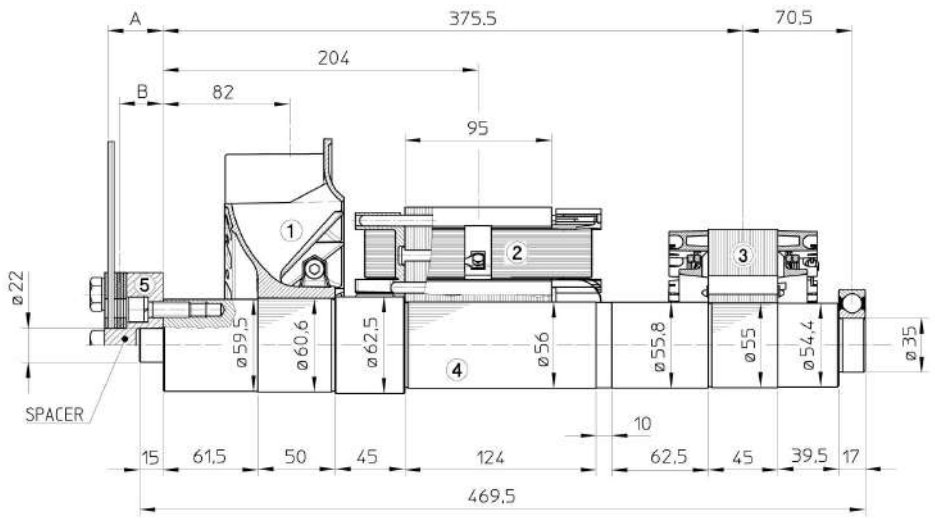

POS.	COMPONENT	WEIGHT (kg)	J (kgm^2)
1	FAN	0.6	0.0044
2	MAIN ROTOR	14.2	0.0564
3	EX. ROTOR	5.5	0.0172
4	SHAFT	8.8	0.0036
TOTAL		29.1	0.0816

SAE	5	SHAFTS COUPLING FLEX PLATE		
N°	A	B	WEIGHT kg	J kgm^2
6 1/2	4	2	1.08	0.0065
7 1/2	4	2	1.35	0.0101
8	35.6	28.3	2.84	0.0158
10	27.6	22.9	3.25	0.0303
11 1/2	14	11.2	3.6	0.0471

SINGLE BEARING DIMENSIONS

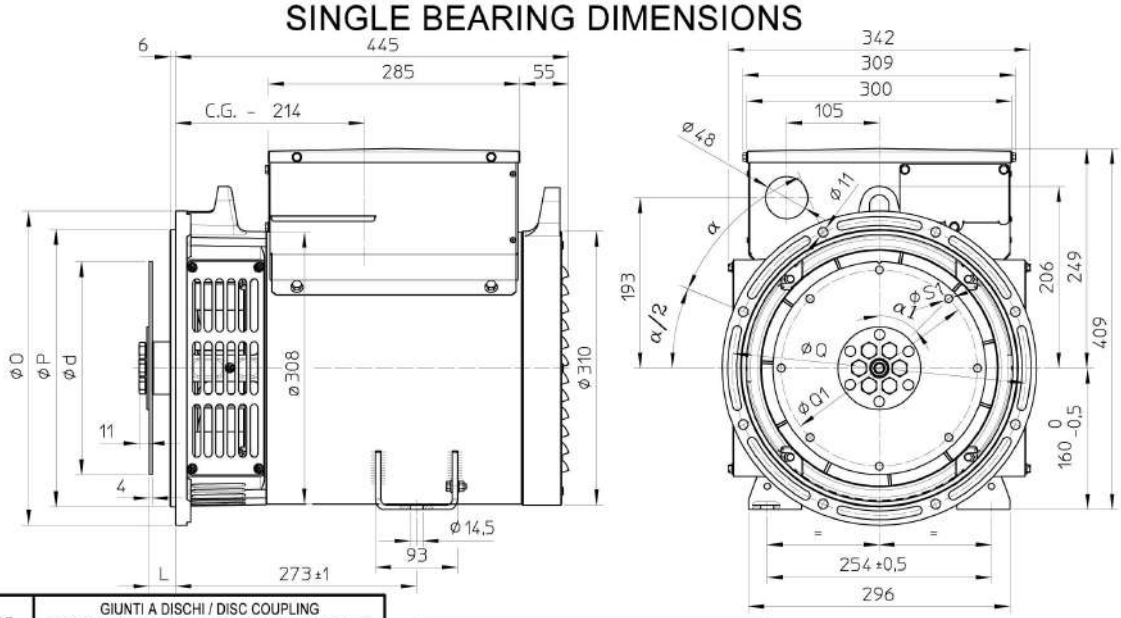

SAE N.	GIUNTI A DISCHI / DISC COUPLING DISCQUE DE MONOPALIER / SCHEIBENKUPPLUNG				
	d	L	Q1	S1	α_1
6 1/2	215.9	30.2	200	9	60°
7 1/2	241.3	30.2	222.25	9	45°
8	263.52	62	244.47	11	60°
10	314.32	53.8	295.27	11	45°
11 1/2	352.42	39.6	333.37	11	45°

SAE N.	FLANGIA / FLANGE BRIDE / FLANSCH			
	O	P	Q	α
5	356	314.3	333.4	45°
4	403	362	381	30°
3	451	409.6	428.6	30°
2	490	447.7	466.7	30°

C.G.= GRAVITY CENTER

nl LS Nh

TWO BEARING MOMENTS OF INERTIA

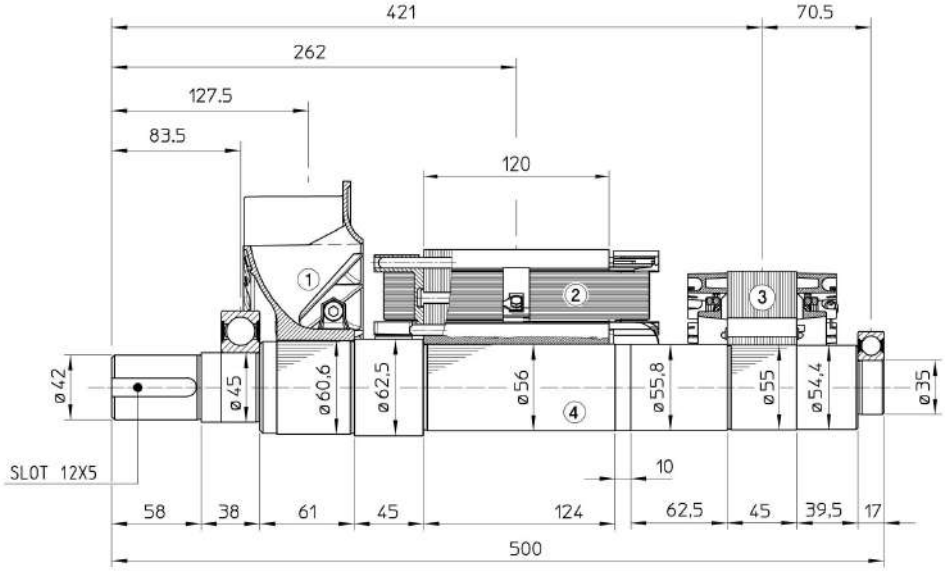

POS.	COMPONENT	WEIGHT (kg)	J (kgm^2)
1	FAN	0.6	0.0044
2	MAIN ROTOR	18.8	0.0750
3	EX. ROTOR	5.5	0.0172
4	SHAFT	8.8	0.0034
TOTAL		33.7	0.1000

TWO BEARING DIMENSIONS

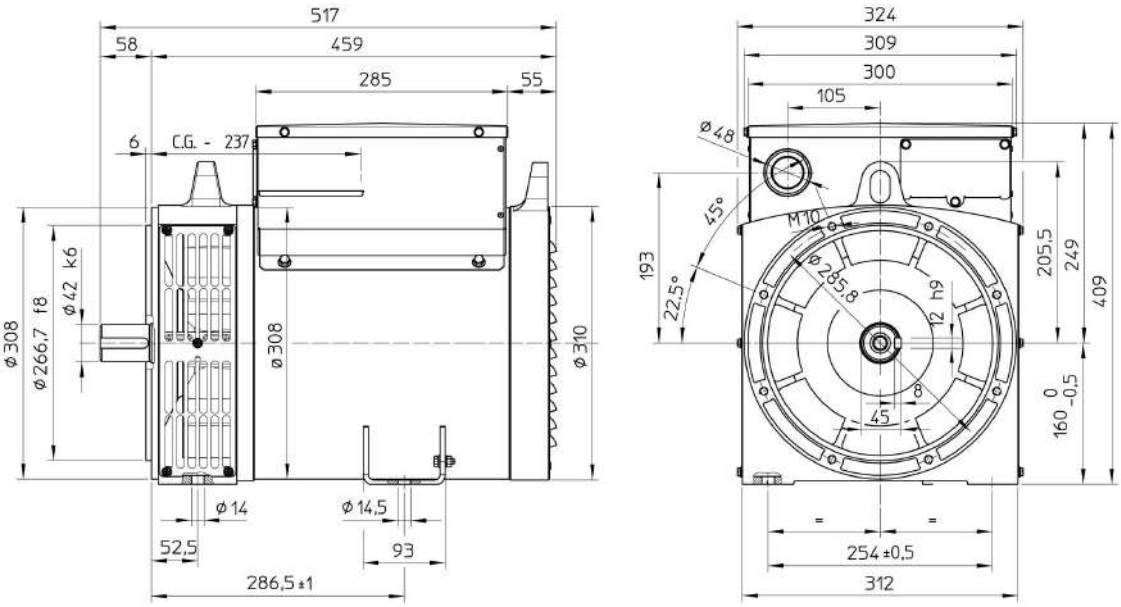

C.G.= GRAVITY CENTER

nl LS Nh

SINGLE BEARING MOMENTS OF INERTIA

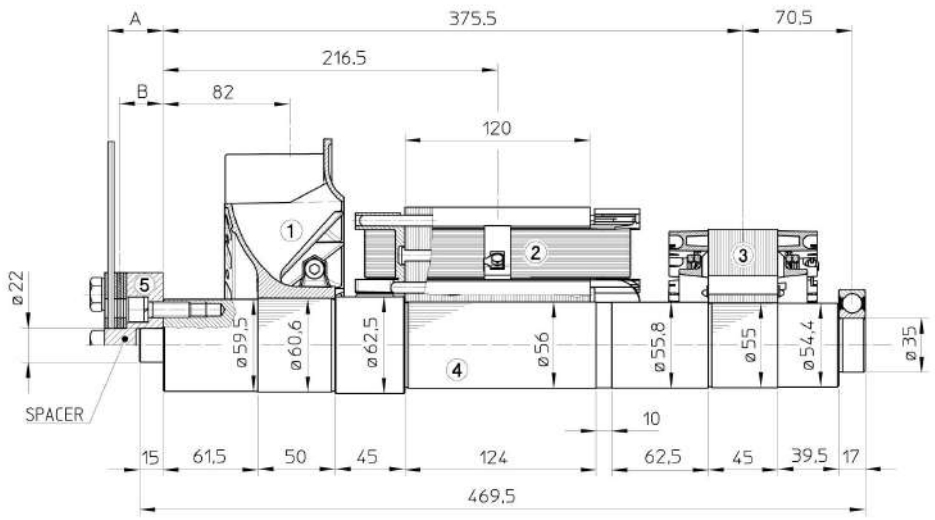

POS.	COMPONENT	WEIGHT (kg)	J (kgm^2)
1	FAN	0.6	0.0044
2	MAIN ROTOR	18.8	0.0750
3	EX. ROTOR	5.5	0.0172
4	SHAFT	8.8	0.0036
TOTAL		33.7	0.1002

SAE	5	SHAFTS COUPLING FLEX PLATE		
N°	A	B	WEIGHT kg	J kgm^2
6 1/2	4	2	1.08	0.0065
7 1/2	4	2	1.35	0.0101
8	35.6	28.3	2.84	0.0158
10	27.6	22.9	3.25	0.0303
11 1/2	14	11.2	3.6	0.0471

SINGLE BEARING DIMENSIONS

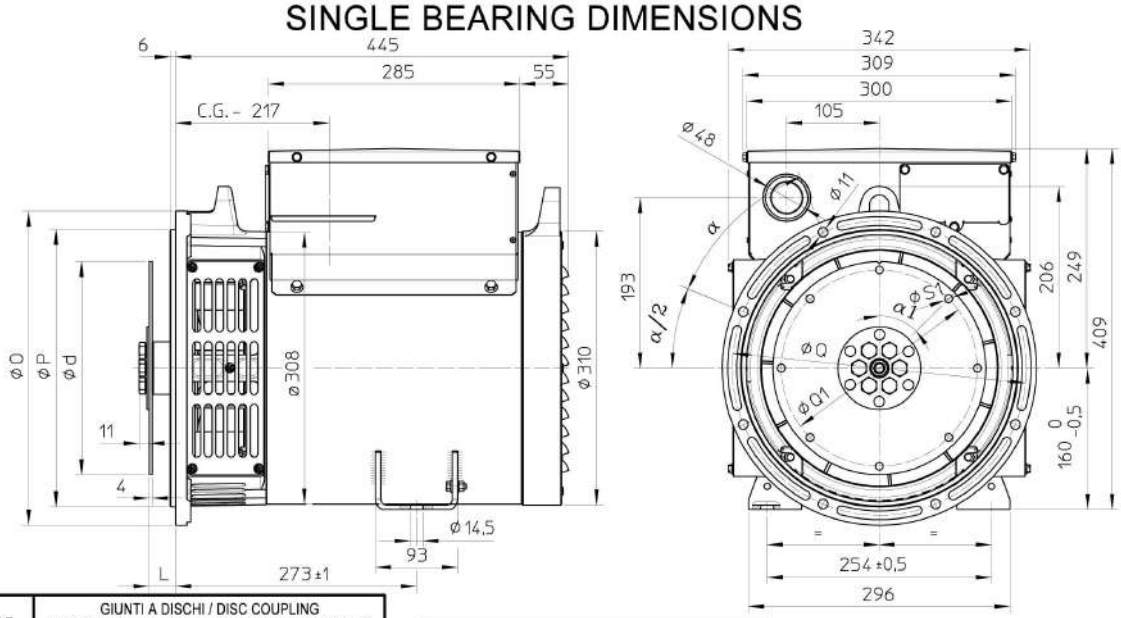

SAE N.	GIUNTI A DISCHI / DISC COUPLING *DISCQUE DE MONOPALIER / SCHEIBENKUPPLUNG*				
	d	L	Q1	S1	α_1
6 1/2	215.9	30.2	200	9	60°
7 1/2	241.3	30.2	222.25	9	45°
8	263.52	62	244.47	11	60°
10	314.32	53.8	295.27	11	45°
11 1/2	352.42	39.6	333.37	11	45°

SAE N.	FLANGIA / FLANGE *BRIDE / FLANSCH*			
	O	P	Q	α
5	356	314.3	333.4	45°
4	403	362	381	30°
3	451	409.6	428.6	30°
2	490	447.7	466.7	30°

C.G.= GRAVITY CENTER

nl LS x N h

TWO BEARING MOMENTS OF INERTIA

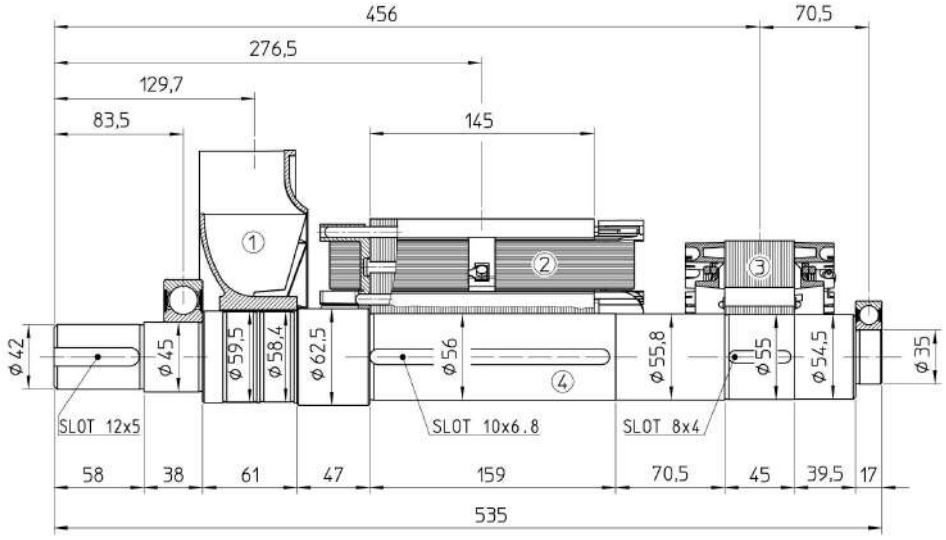

POS.	COMPONENT	WEIGHT (kg)	J (kgm^2)
1	FAN	1.2	0.0087
2	MAIN ROTOR	22.2	0.0887
3	EX. ROTOR	5.5	0.0172
4	SHAFT	9,4	0.0036
TOTAL		38.3	0.1182

TWO BEARING DIMENSIONS

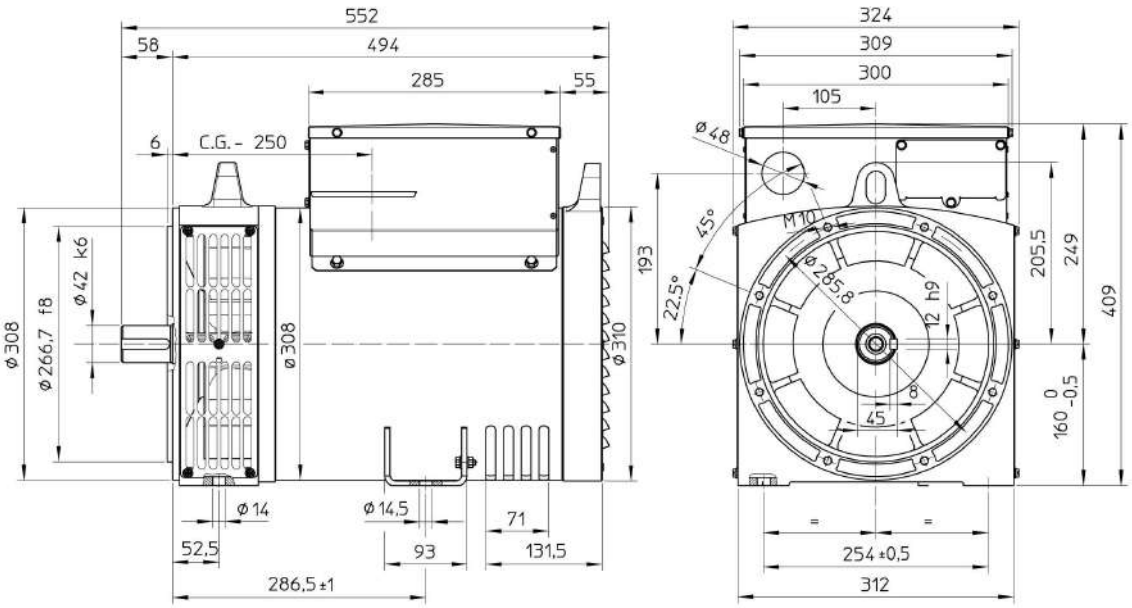

C.G.= GRAVITY CENTER

nl LS x N h

SINGLE BEARING MOMENTS OF INERTIA

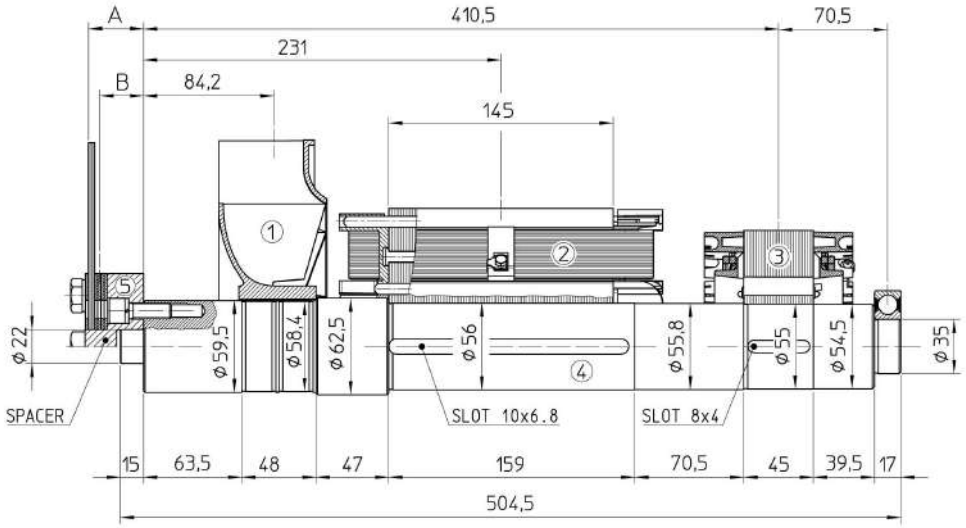

POS.	COMPONENT	WEIGHT (kg)	J (kgm^2)
1	FAN	1.2	0.0087
2	MAIN ROTOR	22.2	0.0887
3	EX. ROTOR	5.5	0.0172
4	SHAFT	9.4	0.0038
TOTAL		38.3	0.1184

SAE N°	5 SHAFTS COUPLING FLEX PLATE			
	A	B	WEIGHT kg	J kgm^2
6 1/2	4	2	1.08	0.0065
7 1/2	4	2	1.35	0.0101
8	35.6	28.3	2.84	0.0158
10	27.6	22.9	3.25	0.0303
11 1/2	14	11.2	3.6	0.0471

SINGLE BEARING DIMENSIONS

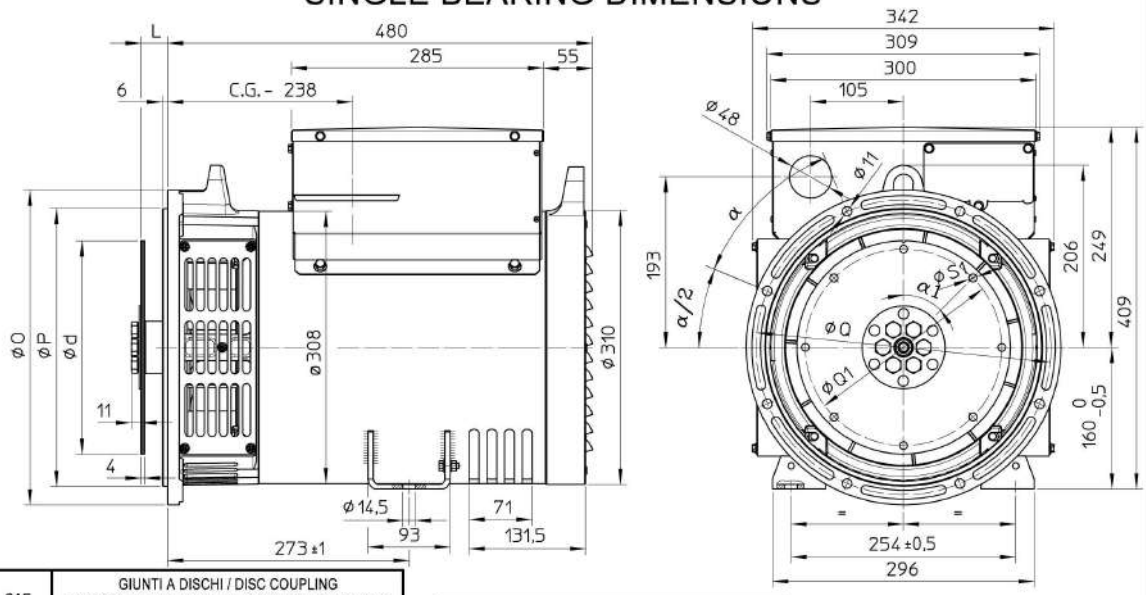

SAE N.	GIUNTI A DISCHI / DISC COUPLING *DISCQUE DE MONOPALIER / SCHEIBENKUPPLUNG*				
	d	*L*	*Q1*	*S1*	α_1
6 1/2	215.9	30.2	200	9	60°
7 1/2	241.3	30.2	222.25	9	45°
8	263.52	62	244.47	11	60°
10	314.32	53.8	295.27	11	45°
11 1/2	352.42	39.6	333.37	11	45°

SAE N.	FLANGIA / FLANGE *BRIDE / FLANSCH*			
	O	*P*	*Q*	α
5	356	314.3	333.4	45°
4	403	362	381	30°
3	451	409.6	428.6	30°
2	490	447.7	466.7	30°

C.G.= GRAVITY CENTER

nl LS LvNh

TWO BEARING MOMENTS OF INERTIA

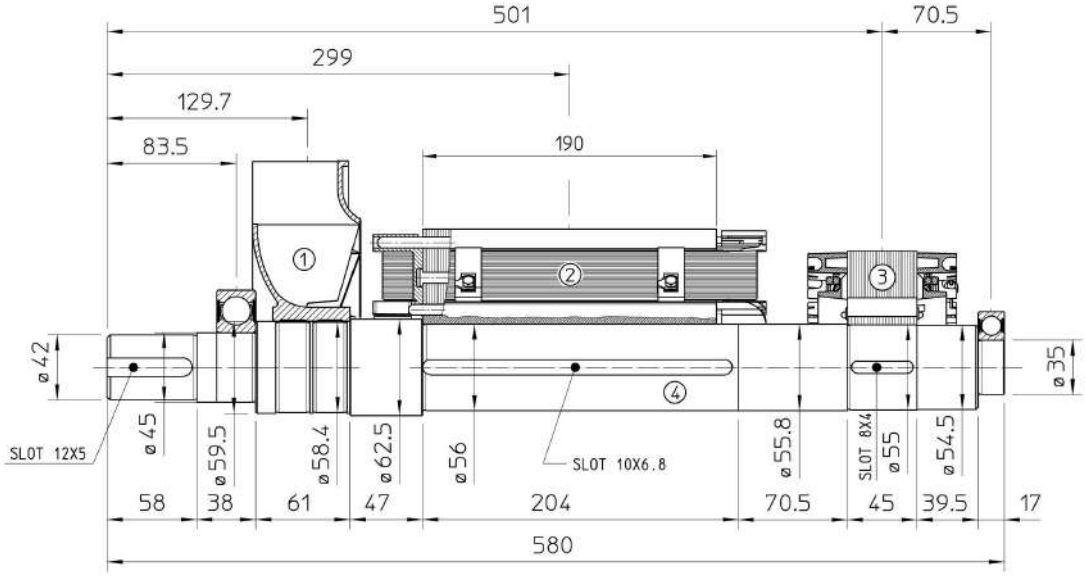

POS.	COMPONENT	WEIGHT (kg)	J (kgm^2)
1	FAN	1.2	0.0087
2	MAIN ROTOR	28.1	0.1121
3	EX. ROTOR	5.5	0.0172
4	SHAFT	10.2	0.0041
TOTAL		45	0.1421

TWO BEARING DIMENSIONS

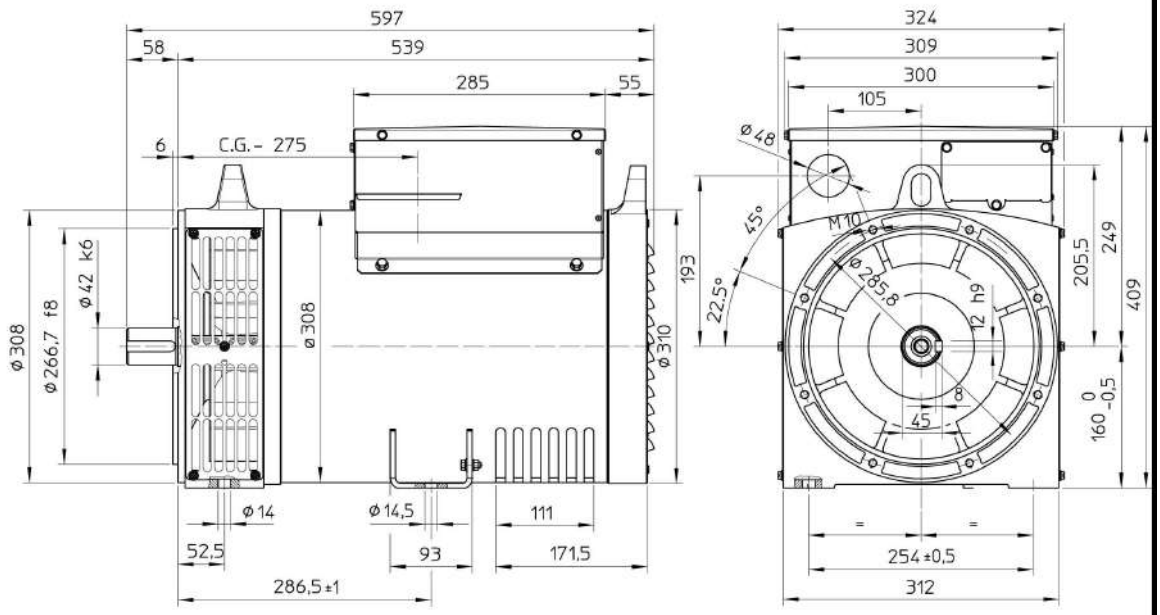

C.G.= GRAVITY CENTER

nl LS LvN h

SINGLE BEARING MOMENTS OF INERTIA

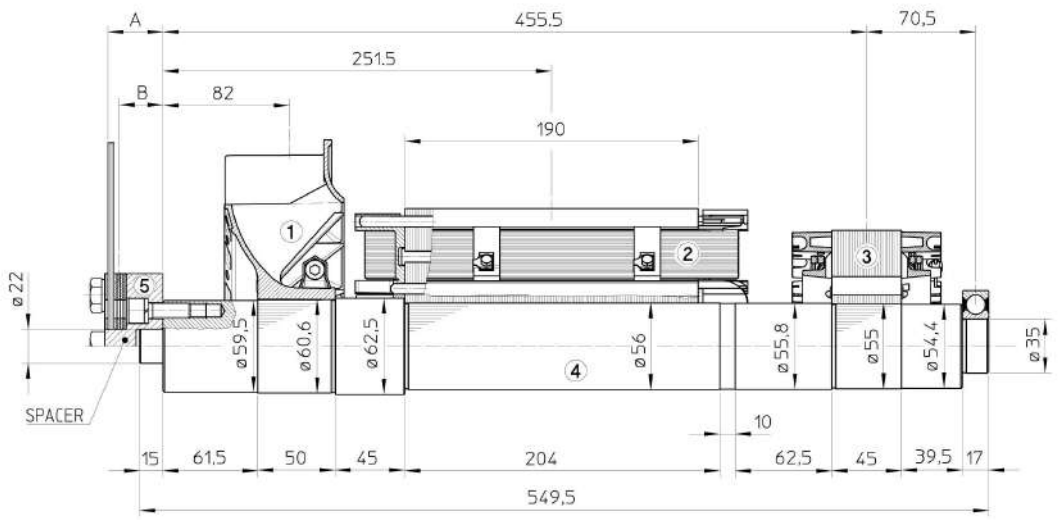

POS.	COMPONENT	WEIGHT (kg)	J (kgm^2)
1	FAN	0.6	0.0044
2	MAIN ROTOR	28.3	0.1129
3	EX. ROTOR	5.5	0.0172
4	SHAFT	10.4	0.0042
	TOTAL	44.8	0.1387

SAE	5	SHAFTS COUPLING FLEX PLATE		
N°	A	B	WEIGHT kg	J kgm^2
6 1/2	4	2	1.08	0.0065
7 1/2	4	2	1.35	0.0101
8	35.6	28.3	2.84	0.0158
10	27.6	22.9	3.25	0.0303
11 1/2	14	11.2	3.6	0.0471

SINGLE BEARING DIMENSIONS

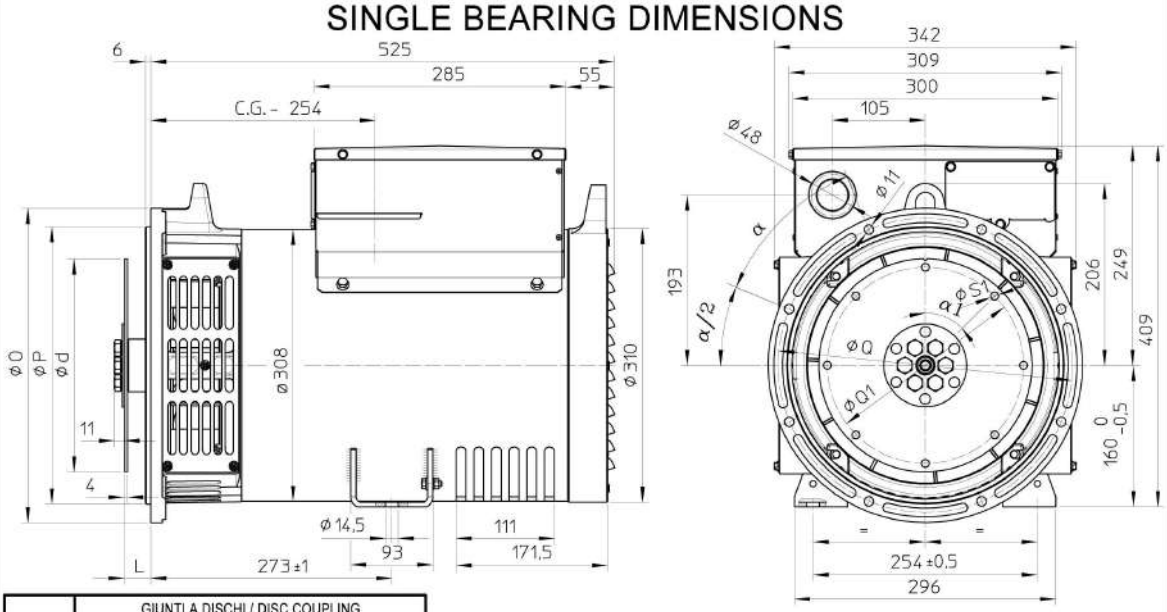

SAE N.	GIUNTI A DISCHI / DISC COUPLING DISCQUE DE MONOPALIER / SCHEIBENKUPPLUNG				
	d	L	Q1	S1	α_1
6 1/2	215.9	30.2	200	9	60°
7 1/2	241.3	30.2	222.25	9	45°
8	263.52	62	244.47	11	60°
10	314.32	53.8	295.27	11	45°
11 1/2	352.42	39.6	333.37	11	45°

SAE N.	FLANGIA / FLANGE BRIDE / FLANSCH			
	O	P	Q	α
5	356	314.3	333.4	45°
4	403	362	381	30°
3	451	409.6	428.6	30°
2	490	447.7	466.7	30°

C.G.= GRAVITY CENTER

nl LS vNh

TWO BEARING MOMENTS OF INERTIA

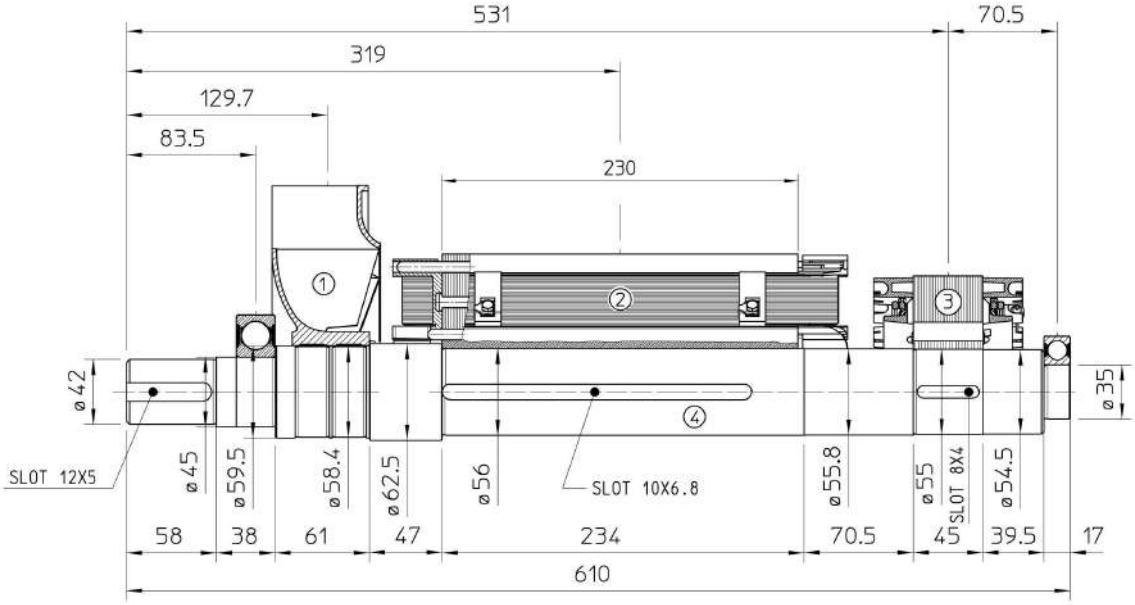

POS.	COMPONENT	WEIGHT (kg)	J (kgm^2)
1	FAN	1.2	0.0087
2	MAIN ROTOR	33.4	0.1334
3	EX. ROTOR	5.5	0.0172
4	SHAFT	10.8	0.0043
TOTAL		50.9	0.1636

TWO BEARING DIMENSIONS

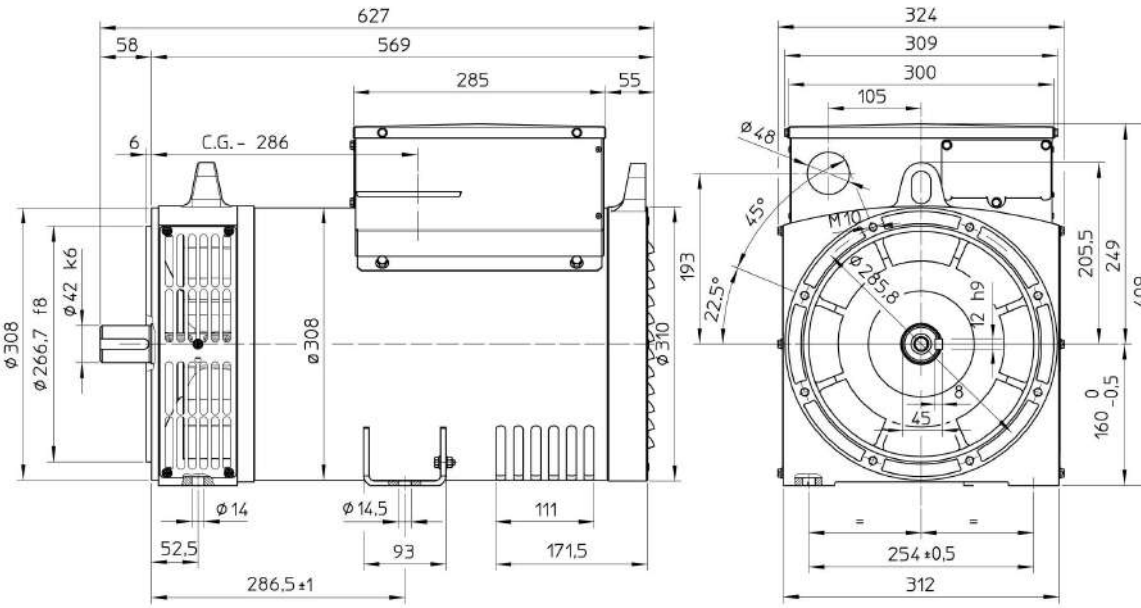

C.G.= GRAVITY CENTER

nl LS vNh

SINGLE BEARING MOMENTS OF INERTIA

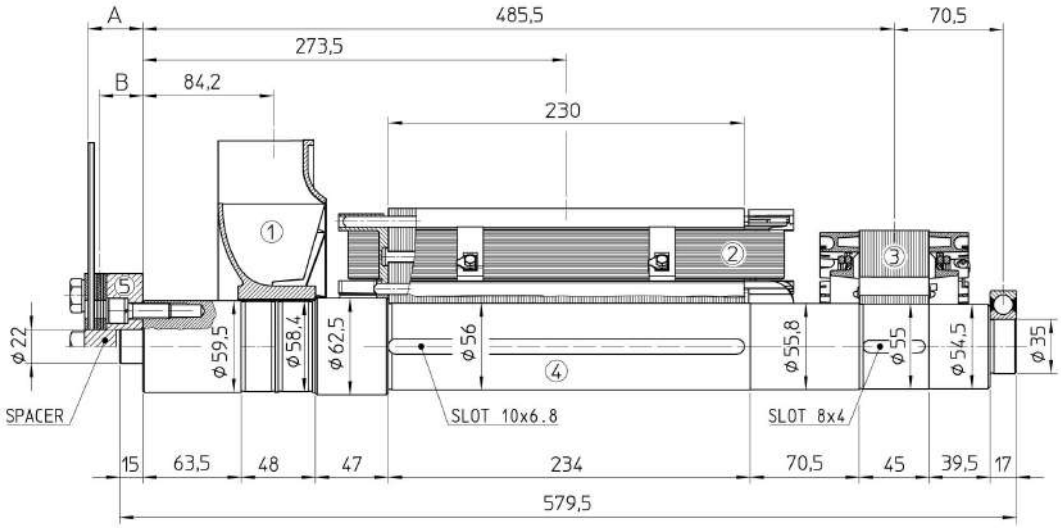

POS.	COMPONENT	WEIGHT (kg)	J (kgm^2)
1	FAN	1.2	0.0087
2	MAIN ROTOR	33.4	0.1334
3	EX. ROTOR	5.5	0.0172
4	SHAFT	10.8	0.0043
TOTAL		50.9	0.1636

SAE	5	SHAFTS COUPLING FLEX PLATE		
N°	A	B	WEIGHT kg	J kgm^2
6 1/2	4	2	1.08	0.0065
7 1/2	4	2	1.35	0.0101
8	35.6	28.3	2.84	0.0158
10	27.6	22.9	3.25	0.0303
11 1/2	14	11.2	3.6	0.0471

SINGLE BEARING DIMENSIONS

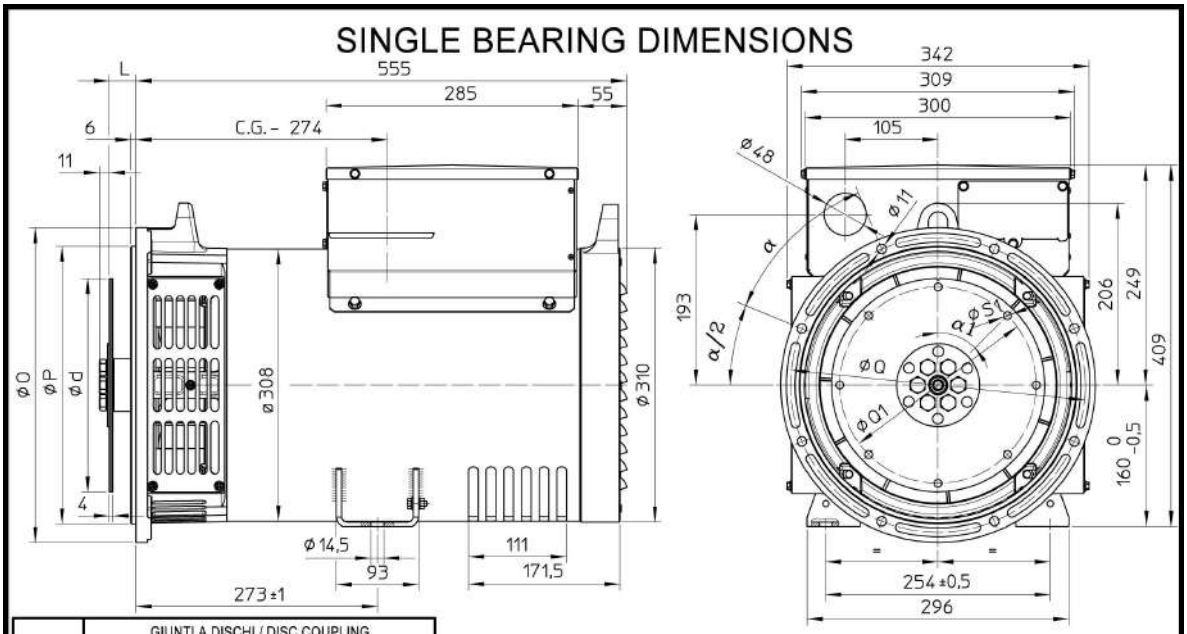

SAE N.	GIUNTI A DISCHI / DISC COUPLING DISCQUE DE MONOPALIER / SCHEIBENKUPPLUNG				
	d	L	Q1	S1	α_1
6 1/2	215.9	30.2	200	9	60°
7 1/2	241.3	30.2	222.25	9	45°
8	263.52	62	244.47	11	60°
10	314.32	53.8	295.27	11	45°
11 1/2	352.42	39.6	333.37	11	45°

SAE N.	FLANGIA / FLANGE BRIDE / FLANSCH			
	O	P	Q	α
5	356	314.3	333.4	45°
4	403	362	381	30°
3	451	409.6	428.6	30°
2	490	447.7	466.7	30°

C.G.= GRAVITY CENTER

z

Mecc Alte SpA (HQ)
Via Roma
20 – 36051 Creazzo
Vicenza – ITALY
T: +39 0444 396111
F: +39 0444 396166
E: info@meccalte.it
aftersales@meccalte.it

Mecc Alte Portable
Via Roma
20 – 36051 Creazzo
Vicenza – ITALY
T: +39 0444 396111
F: +39 0444 396166
E: info@meccalte.it
aftersales@meccalte.it

Mecc Alte Power Products srl
Via Melaro
2 – 36075 Montecchio
Maggiore (VI) – ITALY
T: +39 0444 1831295
F: +39 0444 1831306
E: info@meccalte.it
aftersales@meccalte.it

Zanardi Alternatori srl
Via Dei Laghi
48/B – 36077 Altavilla
Vicenza – ITALY
T: +39 0444 370799
F: +39 0444 370330
E: info@zanardialternatori.it

United Kingdom
Mecc Alte U.K. LTD
6 Lands' End Way
Oakham
Rutland LE15 6RF
T: +44 (0) 1572 771160
F: +44 (0) 1572 771161
E: info@meccalte.co.uk
aftersales@meccalte.co.uk

Spain
Mecc Alte España S.A.
C/ Rio Taibilla, 2
Polig. Ind. Los Valeros
03178 Benijofar (Alicante)
T: +34 (0) 96 6702152
F: +34 (0) 96 6700103
E: info@meccalte.es
aftersales@meccalte.es

China
Mecc Alte Alternator Haimen LTD
755 Nanhai East Rd
Jiangsu HEDZ 226100 PRC
T: +86 (0) 513 82325758
F: +86 (0) 513 82325768
E: info@meccalte.cn
aftersales@meccalte.cn

India
Mecc Alte India PVT LTD
Plot NO: 1, Sanaswadi
Talegaon
Dhamdhere Road Taluka:
Shirur, District:
Pune - 412208
Maharashtra, India
T: +91 2137 619600
F: +91 2137 619699
E: info@meccalte.in
aftersales@meccalte.in

U.S.A. and Canada
Mecc Alte Inc.
1229 Adams Drive
McHenry, IL, 60051
T: +1 815 344 0530
F: +1 815 344 0535
E: info@meccalte.us
aftersales@meccalte.us

Germany
Mecc Alte Generatoren GmbH
Ensener Weg 21
D-51149 Köln
T: +49 (0) 2203 503810
F: +49 (0) 2203 503796
E: info@meccalte.de
aftersales@meccalte.de

Australia
Mecc Alte Alternators PTY LTD
10 Duncan Road, PO Box 1046
Dry Creek, 5094, South
Australia
T: +61 (0) 8 8349 8422
F: +61 (0) 8 8349 8455
E: info@meccalte.com.au
aftersales@meccalte.com.au

France
Mecc Alte International S.A.
Z.E.La Gagnerie
16330 ST.Amant de Boixe
T: +33 (0) 545 397562
F: +33 (0) 545 398820
E: info@meccalte.fr
aftersales@meccalte.fr

Far East
Mecc Alte (F.E.) PTE LTD
19 Kian Teck Drive
Singapore 628836
T: +65 62 657122
F: +65 62 653991
E: info@meccalte.com.sg
aftersales@meccalte.com.sg

mecc alte

www.meccalte.com